PRODUCT GUIDE

2024

SEELEY INTERNATIONAL®

Denver Office
4430 Glencoe St
Denver, CO 80216
Ph. 303-375-0878

Phoenix Office
1002 S 56th Ave, Suite 101
Phoenix, AZ 85043
Ph. 602-353-8066

Service Portal

- Product Manuals
- Technical Bulletins
- Troubleshooting guides and videos

Seeley International (Americas) has a policy of continuous product development and therefore reserves the right to make changes to the cooler specifications without notice.

EXT 155/265 2-SPEED

FULL CONTAINER LOAD ORDERS - DIRECT SHIPMENT ONLY

Breezair Model	MFG#	Industry Standard CFM	Volts	AMPS	Motor HP	Weight LB
EXT155	042909	5500	115	8.4/5.6	0.75 HP	156
EXT265	046716	6500	115	8.4/5.6	0.75HP	186

EXT 155/265 MODEL COOLERS COME EQUIPED WITH THE FOLLOWING

- 2-SPEED JUNCTION BOX SEELECTRIC™ 2-SPEED MOTOR FAN ASSEMBLY
- TORNADO WATER PUMP AND FLOAT VALVE
- MANUAL BLEED-OFF TRAY, CHILLCEL PADS (4)
- ROOF JACK ADAPTER 17 3/4 X 17 3/4 INCHES (EXT155 COOLER MODEL)
- ROOF JACK ADAPTER 19 3/4 X 19 3/4 INCHES (EXT265 COOLER MODEL)

OPTIONS

	MFG#	DESCRIPTION
	112152	SALINITY MANAGER (INCLUDES CONTROL BOX, AUTO DRAIN, SOLENOID, WATER PROBE AND PLUMBING FITTINGS)

THE MOST COMMON REPLACEMENT PARTS

	111568	2-SPEED JUNCTION BOX
	095455	MOTOR 2-SPEED 3/4HP
	095851	TORNADO PUMP 115V
	107608	BLEED OFF FUNNEL DRAIN ADAPTER
	901497	VERTICAL FLOAT VALVE
	114620	CHILLCEL PAD 31.5 X 17.5 X 3.5 EXT155 MODEL (SE OF 4)
	114613	CHILLCEL PAD 31.5 X 25 X 3.5 EXT265 MODEL (SE OF 4)
	4L480-S	V-BELT A-46 / 4L-480 EXT155 MODEL
	826509	V-BELT A-55 / 4L-570 EXT265 MODEL
	109459	BEARING KIT

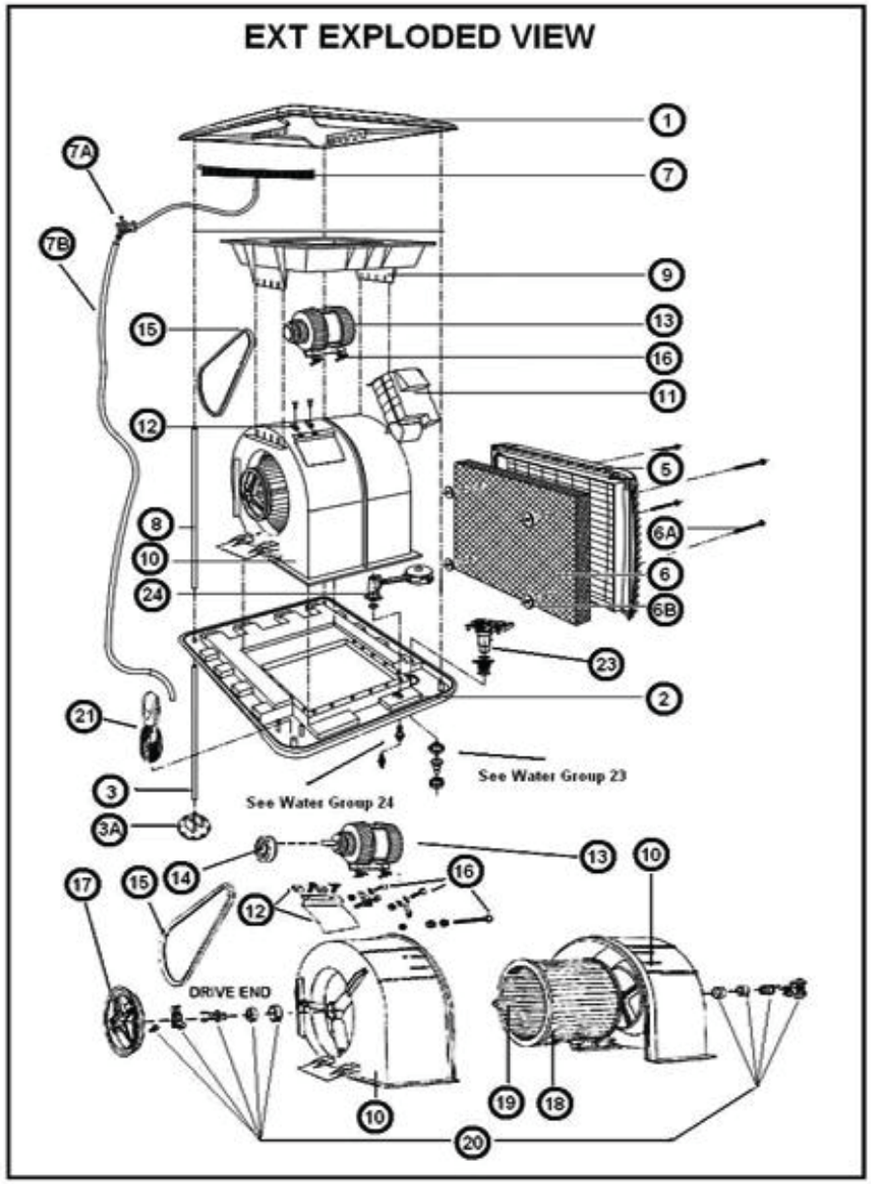

EXT 155/265 PARTS LIST		
DIA#	**MFG#**	**DESCRIPTION**
1	505152	LID BEIGE
1	505169	LID GREY
2	505350	TANK BEIGE
2	505367	TANK GREY
3	573625	LEG EXTENSION
3A	509518	LEG EXTENSION FOOT
5	505855	PAD FRAME BEIGE (EXT155)
5	505862	PAD FRAME GREY (EXT155)
5	505954	PAD FRAME BEIGE (EXT265)
5	505961	PAD FRAME GREY (EXT265)
6	114620	CHILLCEL PAD (EXT155)
6	114613	CHILLCEL PAD (EXT265)
6A	561067	PAD RETAINING PIN
6B	401966	PAD RETAINING DISC
7	506784	SPREADER WATER DISTRIBUTION
7A	511412	4 WAY WATER DISTRIBUTOR
7B	077254	WATER DISTRIBUTOR HOSE SET
8	507422	CORNER POST (EXT155)
8	507095	CORNER POST (EXT265)
N/S	541679	CORNER PAD CLIPS
9	508122	TRANSITION SCROLL TO LID (EXT265)
10	116013	SCROLL ASSEMBLY (EXT155)
10	116020	SCROLL ASSEMBLY (EXT265)
11	111568	2-SPEED JUNCTION BOX
12	507866	MOTOR MOUNT PLATE (EXT155)
12	507873	MOTOR MOUNT PLATE (EXT265)
13	095455	MOTOR 2-SPEED 3/4 HP
14	108070	MOTOR PULLEY 3 1/2"
15	4L480-S	V-BELT A-46 / 4L-480 (EXT155)
15	826509	V-BELT A-55 / 4L-570 (EXT265)
16	112008	INSTALLATION HARDWARE KIT
17	501710	FAN PULLEY 8" (EXT155)

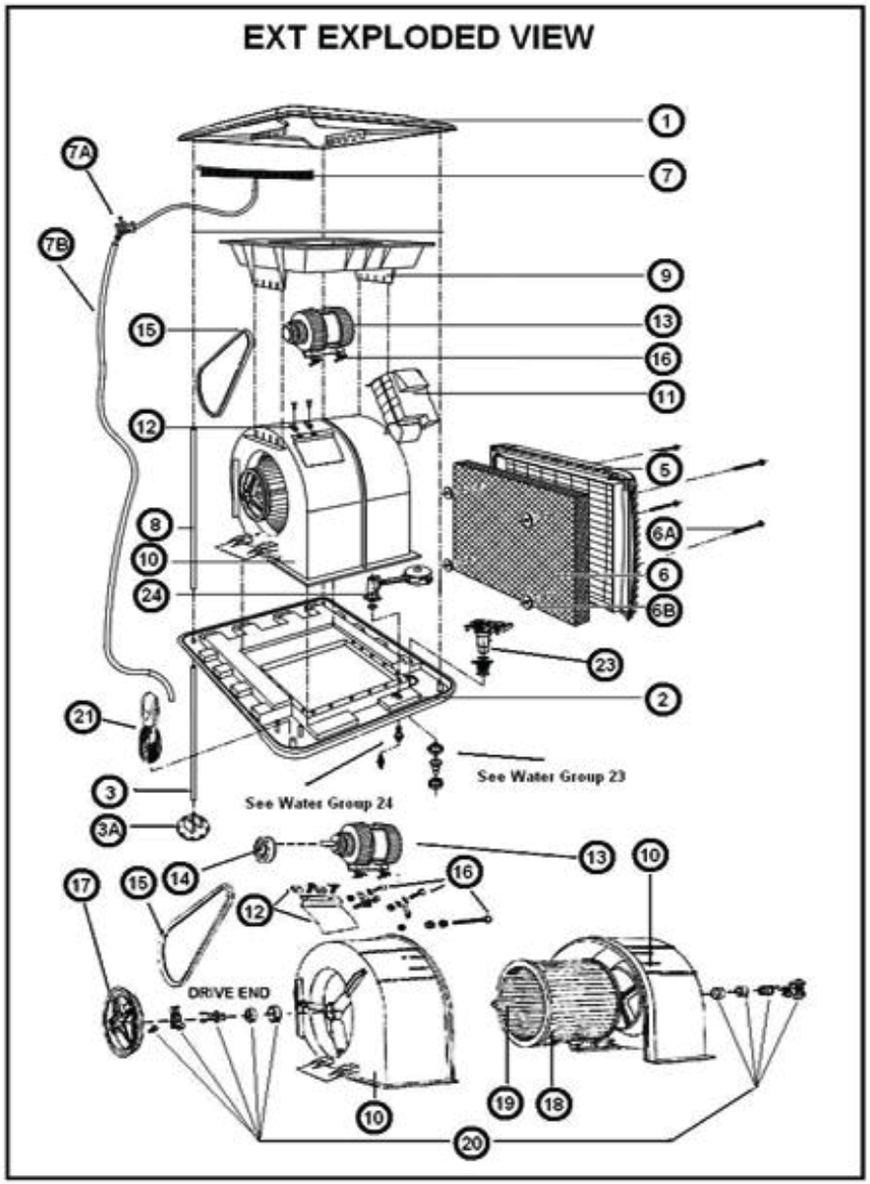

EXT 155/265 PARTS LIST CONT.		
DIA#	**MFG#**	**DESCRIPTION**
17A	501703	FAN PULLEY 9" (EXT265)
18	113289	FAN CENTRIFUGAL & SHAFT (EXT155)
18A	113272	FAN CENTRIFUGAL & SHAFT (EXT265)
19	504605	FAN SHAFT SQUARE
20	109459	BEARING KIT
21	095851	TORNADO WATER PUMP 115V
23	107608	BLEED OFF FUNNEL DRAIN ADAPTER
24	901497	VERTIAL FLOAT VALVE ASSEMBLY
N/S	573649	LEG EXTENSION 990MM
N/S	529738	ROOF JACK ADAPTOR 17 3/4 (EXT155)
N/S	529745	ROOF JACK ADAPTOR 19 3/4 (EXT265)
N/S	506203	SCROLL MOTOR SIDE (EXT155)
N/S	506302	SCROLL NON MOTOR SIDE (EXT155)
N/S	506401	SCROLL MOTOR SIDE (EXT265)
N/S	506500	SCROLL NON MOTOR SIDE (EXT265)
N/S	504506	PLATE CUT OFF (EXT155)
N/S	513805	PLATE CUT OFF (EXT265)
N/S	902234	KIT PACKOUT EXT
N/S	805146	J-NUT
N/S	805160	J-NUT BOLT
N/S	122441	MOTOR MOUNT BRACKET ASSY LEFT
N/S	122458	MOTOR MOUNT BRACKET ASSY RIGHT
N/S	594910	DRAIN VALVE RUBBER SEAL
N/S	593104	ADAPTER DRAIN 32-20 MM
N/S	861593	NUT DRAIN ADAPTOR
N/S	535401	NUT 1.5 BSP
N/S	804415	O'RING BLEED OF FUNNEL SMALL
N/S	804811	O'RING BLEED OF FUNNEL LARGE
N/S	835310	BLEED STOP SHIELD
N/S	800059	O'RING FLOAT VALVE (NIPPLE)
N/S	800103	O'RING FLOAT VALVE (VALVE STEM)
N/S	402604	1/2" BSP - 1/2" BPS NIPPLE

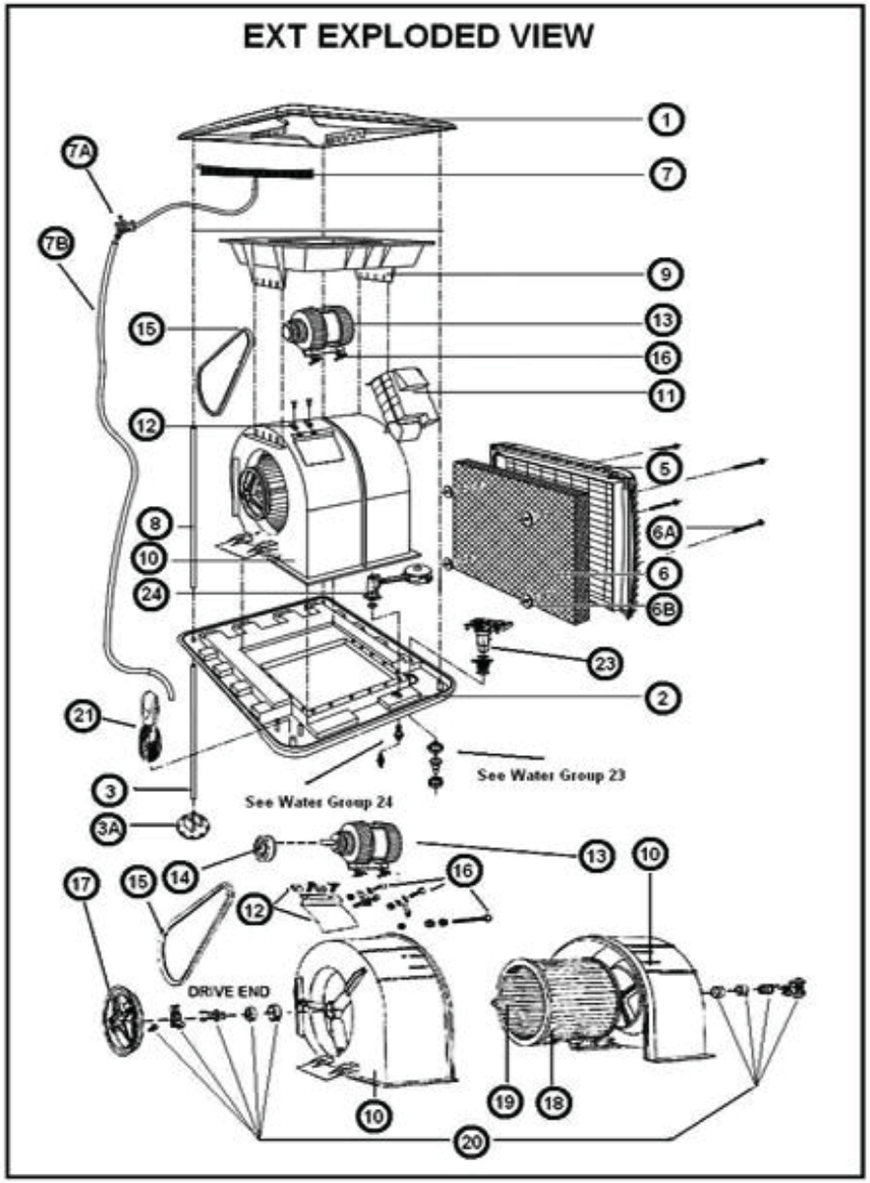

EXT 155/265 PARTS LIST CONT.		
DIA#	MFG#	DESCRIPTION
N/S	661421	BRASS CONNECTOR 1/2" BSP - 1/4" BSP
N/S	824949	1/2" BSP NUT & OLIVE WATER INLET
N/S	834320	SOLENOID VALVE 24V
N/S	832760	CABLE SOLENOID
N/S	552019	SOLENOID COVER
N/S	850764	FLEXIBLE HOSE AND WASHER ASSY
N/S	816074	KIT FITTING SOLENOID
N/S	813264	COPPER TUBE STRAIGHT
N/S	112152	SALINITY MANAGER 115V
N/S	833842	PROBE WATER SENSOR
N/S	105345	AUTO DRAIN 24V
N/S	825380	WASHER TAP 18.5*3 BLACK

EXV 155/275 VARIABLE SPEED

(DISCONTINUED)

Breezair Model	MFG#	Industry Standard CFM	Volts	AMPS	Motor HP	Weight LB
EXV155	042855	5500	115	7.5	0.75 HP	168
EXV275	046686	7500	115	10.2	1 HP	198

EXV 155/275 MODEL COOLERS COME EQUIPED WITH THE FOLLOWING

- VARIABLE SPEED CPMD JUNCTION BOX
- VARIABLE SPEED SEELECTRIC™ MOTOR
- FAN ASSEMBLY
- TORNADO WATER PUMP AND FLOAT VALVE
- CHILLCEL PADS (4)
- ROOF JACK ADAPTER 17 3/4 X 17 3/4 INCHES (EXV155 COOLER MODEL)
- ROOF JACK ADAPTER 19 3/4 X 19 3/4 INCHES (EXV275 COOLER MODEL)

PLEASE NOTE: EXV REQUIRES PURCHASE OF ONE OF THE FOLLOWING SPEED CONTROL

	111940	HARMONY SPEED CONTROL KIT INCLUDES WIRED WALL CONTROL WITH LEAD ASSEMBLY, SOLENOID AND HARDWARE, 24V AUTO DRAIN AND WATER PROBE
	111957	HORIZON SPEED CONTROL KIT INCLUDES WIRELESS WALL CONTROL AND LEAD ASSEMBLY, SOLENOID AND HARDWARE, 24V AUTO DRAIN AND WATER PROBE

THE MOST COMMON REPLACEMENT PARTS

	110417	CPMD J-BOX VARIABLE SPEED
	095264	MOTOR VAR SPEED 3/4 HP (EXV155)
	095271	MOTOR VAR SPEED 1 HP (EXV275)
	095851	TORNADO PUMP 115V
	105345	AUTO DRAIN 24V
	901497	VERTICAL FLOAT VALVE
	834320	SOLENOID VALVE 24V
	833811	WATER PROBE
	114620	CHILLCEL PAD 31.5 X 17.5 X 3.5 (EXV155)
	114613	CHILLCEL PAD 31.5 X 25 X 3.5 (EXV275)
	832159	V-BELT A-47 / 4L-490 (EXV155)
	818054	V-BELT A-56 / 4L-580 (EXV275)
	109459	BEARING KIT
	115900	HARMONY SENSOR TOUCH WIRED WALL CONTROL
	110424	HORIZON SENSOR TOUCH WIRELESS WALL CONTROL

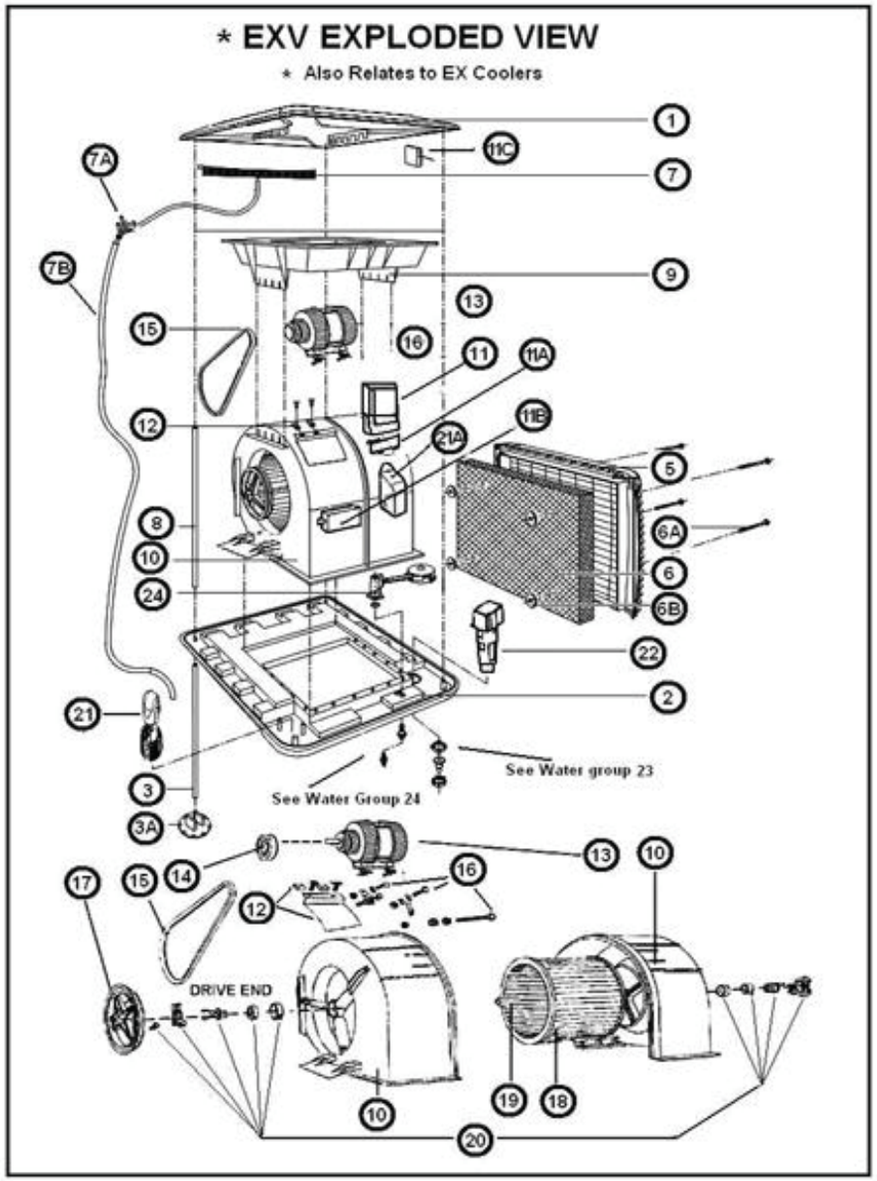

EXV 155/275 PARTS LIST		
DIA#	**MFG#**	**DESCRIPTION**
1	505152	LID BEIGE
1	505169	LID GREY
2	505350	TANK BEIGE
2	505367	TANK GREY
3	573625	LEG EXTENSION
3A	509518	LEG EXTENSION FOOT
5	505855	PAD FRAME BEIGE (EXV155)
5	505862	PAD FRAME GREY (EXV155)
5	505954	PAD FRAME BEIGE (EXV275)
5	505961	PAD FRAME GREY (EXV275)
6	114620	CHILLCEL PAD (EXV155)
6	114613	CHILLCEL PAD (EXV275)
6A	561067	PAD RETAINING PIN
6B	401966	PAD RETAINING DISC
7	506784	SPREADER WATER DISTRIBUTION
7A	511412	4 WAY WATER DISTRIBUTOR
7B	077254	WATER DISTRIBUTOR HOSE SET
8	507422	CORNER POST (EXV155)
8	507095	CORNER POST (EXV275)
N/S	541679	CORNER PAD CLIPS
9	508122	TRANSITION SCROLL TO LID (EXV275)
10	116013	SCROLL ASSEMBLY (EXV155)
10	116020	SCROLL ASSEMBLY (EXV275)
11	110417	CPMD J-BOX VARIABLE SPEED
11A	560298	CPMD J-BOX MOUNTING CRADLE
11B	834283	MAIN POWER JUNCTION BOX
11C	110448	RECEIVER
12	507866	MOTOR MOUNT PLATE (EXV155)
12	507873	MOTOR MOUNT PLATE (EXV275)
13	095264	MOTOR VAR. SPEED 3/4 HP (EXV155)
13	095271	MOTOR VAR. SPPED 1 HP (EXV275)
14	108063	MOTOR PULLEY 4"

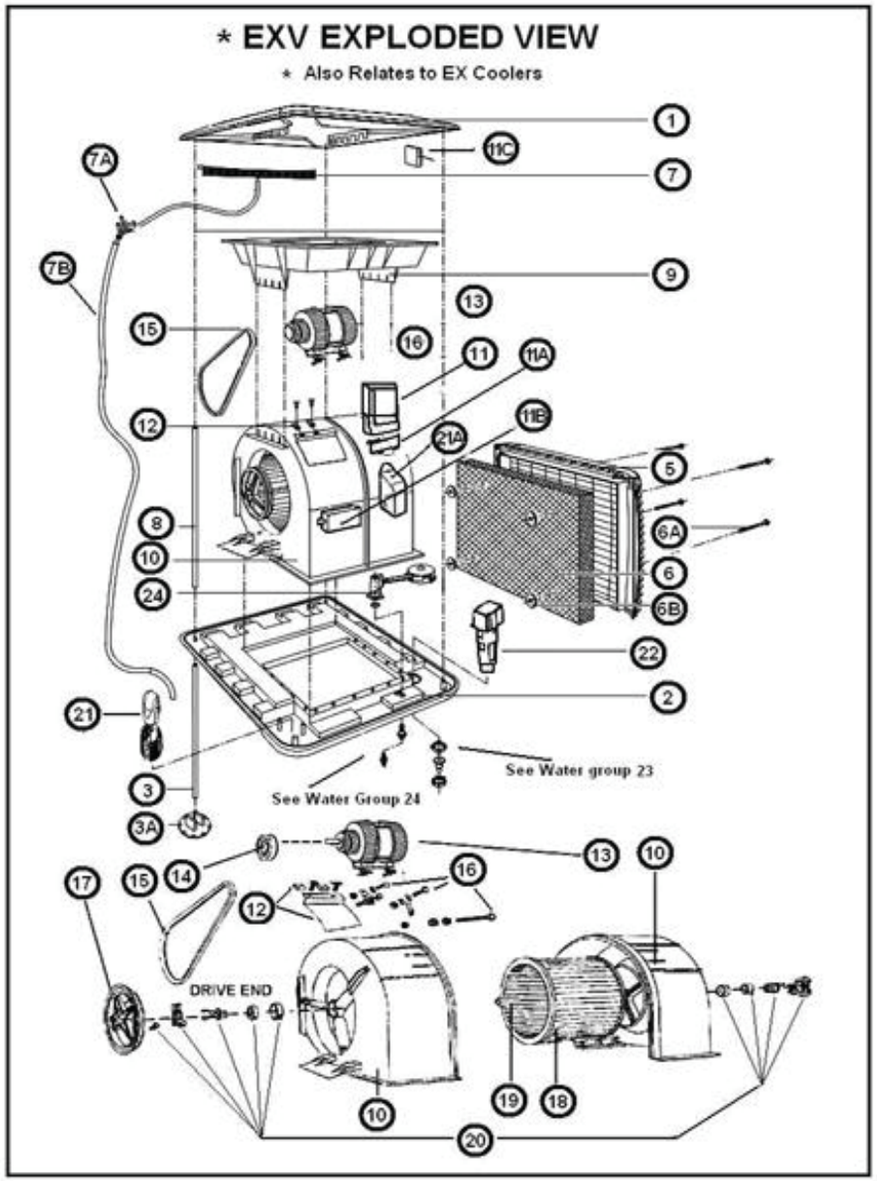

EXV 155/275 PARTS LIST CONT.		
DIA#	MFG#	DESCRIPTION
15	832159	V-BELT A47 / 4L490 (EXV155)
15	818054	V-BELT A56 / 4L580 (EXV275)
16	112008	INSTALLATION HARDWARE KIT
17	501710	FAN PULLEY 8" (EXV155)
17	501703	FAN PULLEY 9" (EXV275)
18	113289	FAN CENTRIFUGAL & SHAFT (EXV155)
18	113272	FAN CENTRIFUGAL & SHAFT (EXV275)
19	504605	FAN SHAFT SQUARE
20	109459	BEARING KIT
21	095851	TORNADO WATER PUMP 115V
22	105345	AUTO DRAIN 24V
24	901497	VERTICAL FLOAT VALVE
N/S	834320	SOLENOID VALVE 24V
N/S	833811	PROBE WATER SENSOR
N/S	832777	CABLE 65' SENSOR TOUCH WALL CONTROL
N/S	833897	CABLE 131' SENSOR TOUCH WALL CONTROL
N/S	830971	CABLE 15' RECEIVER RF
N/S	584331	PLATE MOUNT WALL FOR 115900
N/S	106458	PLATE MOUNT WALL FOR 110424
N/S	573649	LEG EXTENSION 990MM
N/S	529738	ROOF JACK ADAPTOR 17 3/4 (EXV155)
N/S	529745	ROOF JACK ADAPTOR 19 3/4 (EXV275)
N/S	506203	SCROLL MOTOR SIDE (EXV155)
N/S	506302	SCROLL NON MOTOR SIDE (EXV155)
N/S	506401	SCROLL MOTOR SIDE (EXV275)
N/S	506500	SCROLL NON MOTOR SIDE (EXV275)
N/S	504506	PLATE CUT OFF (EXV155)
N/S	513805	PLATE CUT OFF (EXV275)
N/S	857398	MAIN POWER LEAD
N/S	115900	HARMONY WIRED WALL CONTROL
N/S	110424	HORIZON WIRELESS WALL CONTROL
N/S	834399	LEAD ASSY 328' 4 PIN

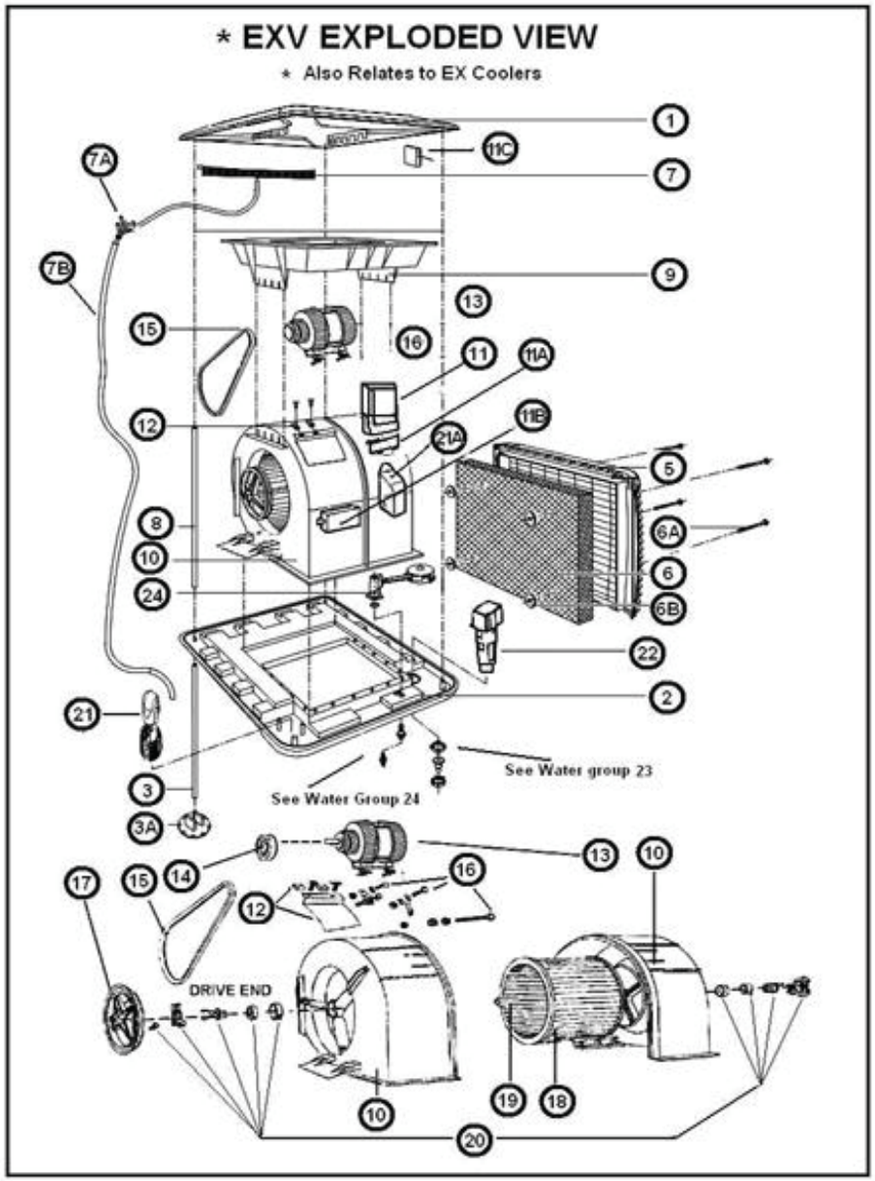

EXV 155/275 PARTS LIST CONT.		
DIA#	MFG#	DESCRIPTION
N/S	111940	HARMONY SENSOR TOUCH KIT
N/S	111957	HORIZON SENSOR TOUCH KIT
N/S	805146	J-NUT
N/S	805160	J-NUT BOLT
N/S	122441	MOTOR MOUNT BRACKET ASSY LEFT
N/S	122458	MOTOR MOUNT BRACKET ASSY RIGHT
N/S	594910	DRAIN VALVE RUBBER SEAL
N/S	593104	ADAPTER DRAIN 32-20 MM
N/S	861593	NUT DRAIN ADAPTOR
N/S	535401	NUT 1.5 BSP
N/S	804415	O'RING BLEED OF FUNNEL SMALL
N/S	804811	O'RING BLEED OF FUNNEL LARGE
N/S	800059	O'RING FLOAT VALVE (NIPPLE)
N/S	800103	O'RING FLOAT VALVE (VALVE STEM)
N/S	402604	1/2" BSP - 1/2" BPS NIPPLE
N/S	110158	PUMP CONNECTOR ENCLOSURE
N/S	CDK1	CPMD DIAGNOSTIC KIT
N/S	824949	1/2" BSP NUT & OLIVE WATER INLET
N/S	832760	CABLE SOLENOID
N/S	552019	SOLENOID COVER
N/S	850764	FLEXIBLE HOSE AND WASHER ASSY
N/S	816074	KIT FITTING SOLENOID
N/S	813264	COPPER TUBE STRAIGHT
N/S	661421	BRASS CONNECTOR 1/2" BSP - 1/4" BSP
N/S	535401	NUT 1.5 BSP
N/S	825380	WASHER TAP 18.5*3 BLACK

EXH 170/210 VARIABLE SPEED

(DISCONTINUED)

Breezair Model	MFG#	Industry Standard CFM	Volts	AMPS	Motor HP	Weight LB
EXH170	043739	7500	230	5.8	1 HP	188
EXH210	046709	9500	230	9	1 HP	188

EXH 170/210 MODEL COOLERS COME EQUIPED WITH THE FOLLOWING

- VARIABLE SPEED CPMD JUNCTION BOX
- EMC DIRECT DRIVE MOTOR
- FAN ASSEMBLY
- TORNADO WATER PUMP 230V AND FLOAT VALVE
- CHILLCEL PADS (4)
- ROOF JACK ADAPTER 19 3/4 X 19 3/4 INCHES (EXH170/210 COOLER MODELS)

PLEASE NOTE: EXV REQUIRES PURCHASE OF ONE OF THE FOLLOWING SPEED CONTROL

	111940	HARMONY SPEED CONTROL KIT INCLUDES WIRED WALL CONTROL WITH LEAD ASSEMBLY, SOLENOID AND HARDWARE, 24V AUTO DRAIN AND WATER PROBE
	111957	HORIZON SPEED CONTROL KIT INCLUDES WIRELESS WALL CONTROL AND LEAD ASSEMBLY, SOLENOID AND HARDWARE, 24V AUTO DRAIN AND WATER PROBE

THE MOST COMMON REPLACEMENT PARTS

	109930	CPMD J-BOX VARIABLE SPEED
	095943	EMC MOTOR VARIABLE SPEED 1 HP
	095967	EMC MOTOR VARIABLE SPEED 2 HP
	095905	TORNADO PUMP 230V
	105345	AUTO DRAIN 24V
	901497	VERTICAL FLOAT VALVE
	834320	SOLENOID VALVE 24V
	110448	RECEIVER
	833811	WATER PROBE
	115900	HARMONY SENSOR TOUCH WIRED WALL CONTROL
	110424	HORIZON SENSOR TOUCH WIRELESS WALL CONTROL
	114613	CHILLCEL PAD EXH170 (SET OF 4)
	114583	CHILLCEL PAD EXH210 (SET OF 4)

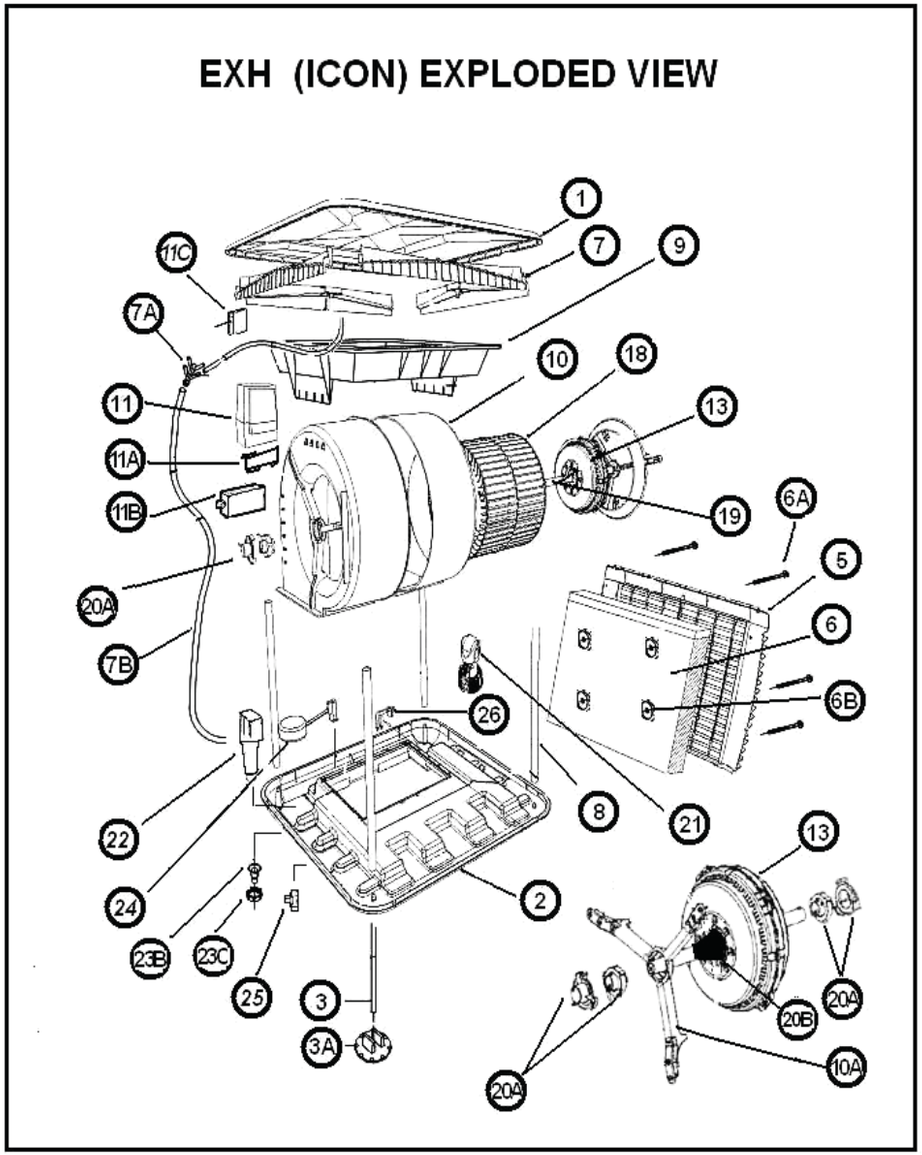

EXH 170/210 PARTS LIST		
DIA#	MFG#	DESCRIPTION
1	505152	LID BEIGE
1	505169	LID GREY
2	505350	TANK BEIGE
2	505367	TANK GREY
3	573625	LEG EXTENSION
3A	509518	LEG EXTENSION FOOT
5	505594	PAD FRAME BEIGE
5	505961	PAD FRAME GREY
6	114613	CHILLCEL PAD EXH170 SET OF 4
6	114583	CHILLCEL PAD EXH210 SET OF 4
6A	561067	PAD RETAINING PIN
6B	401966	PAD RETAINING DISC
7	506784	SPREADER WATER DISTRIBUTION
7A	511412	4 WAY WATER DISTRIBUTOR
7B	077254	WATER DISTRIBUTOR HOSE SET
8	507095	CORNER POST
N/S	541679	CORNER PAD CLIPS
9	508122	TRANSITION SCROLL TO LID
10	116020	SCROLL ASSEMBLY
11	109930	CPMD J-BOX VARIABLE SPEED
11A	560878	J-BOX MOUNTING CRADLE
11B	834283	MAIN POWER JUNCTION BOX
11C	110448	RECEIVER
13	095943	EMC MOTOR VARIABLE SPEED 1 HP
13	095967	EMC MOTOR VARIABLE SPEED 2 HP
18	109312	FAN CENTRIFUGAL
19	841397	FAN SHAFT ROUND ALLOY
20A	502007	DUST END CUP
20A	543253	RESILIENT MOUNT & INSERT
20B	560793	FAN SHAFT SEAL
21	095905	TORNADO PUMP 230V
22	105345	AUTO DRAIN 24V

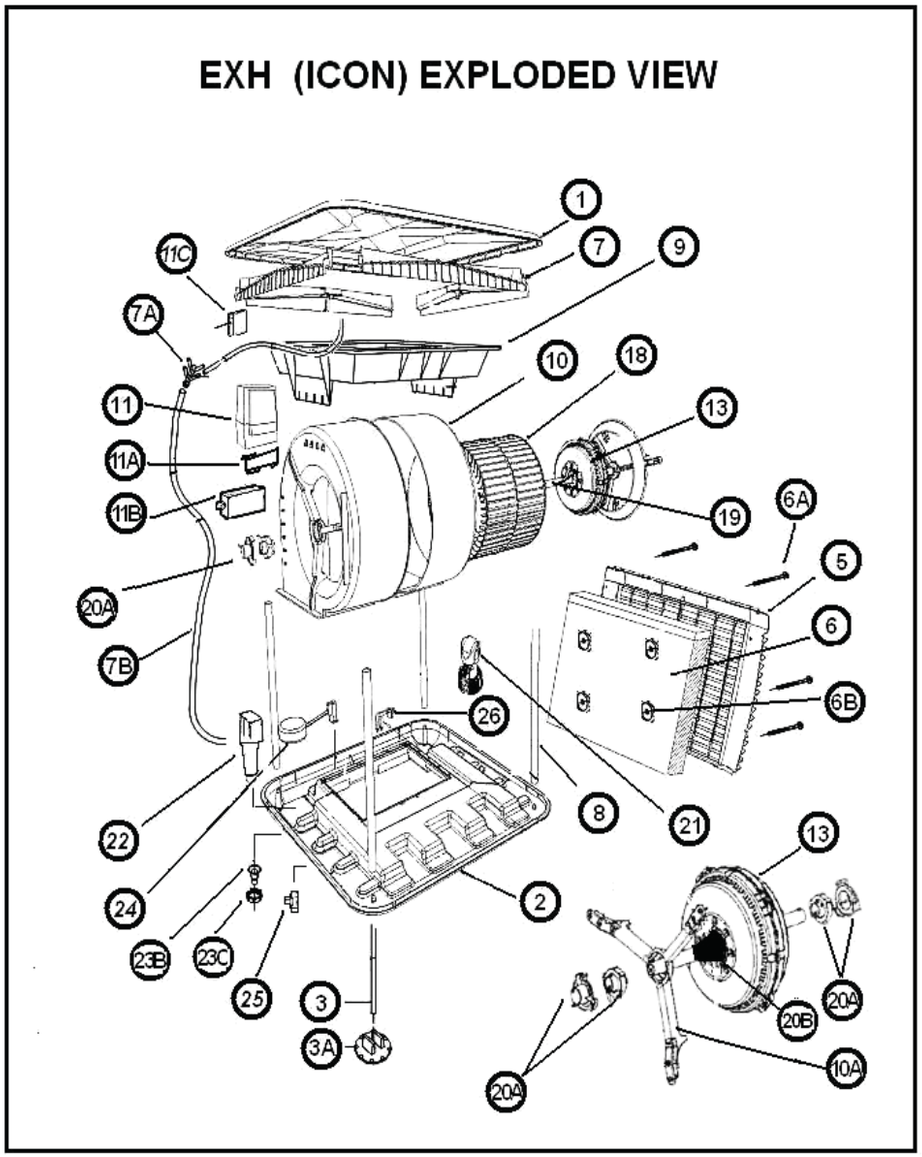

EXH 170/210 PARTS LIST CONT.		
DIA#	MFG#	DESCRIPTION
23B	593104	ADAPTER DRAIN 32-20 MM
23C	861593	NUT DRAIN ADAPTOR
24	901497	VERTICAL FLOAT VALVE
25	834320	SOLENOID VALVE 24V
N/S	832777	CABLE 65' SENSOR TOUCH WALL CONTROL
N/S	833897	CABLE 131' SENSOR TOUCH WALL CONTROL
N/S	830971	CABLE 15' RECEIVER RF
N/S	584331	PLATE MOUNT WALL FOR 115900
N/S	106458	PLATE MOUNT WALL FOR 110424
N/S	573649	LEG EXTENSION 990 MM
N/S	529745	ROOF JACK ADAPTOR 19 3/4
N/S	506401	SCROLL MOTOR SIDE
N/S	506500	SCROLL NON MOTOR SIDE
N/S	513805	PLATE CUT OFF
N/S	109305	SPIDER ASSEMBLT / SCROLL CUTOUT DD
N/S	857398	MAIN POWER LEAD
N/S	115900	HARMONY WIRED WALL CONTROL
N/S	110424	HORIZON WIRELESS WALL CONTROL
N/S	834399	LEAD ASSY 328' 4 PIN
N/S	833934	LEAD ASSY 262' 4 PIN
N/S	111940	HARMONY SENSOR TOUCH KIT
N/S	111957	HORIZON SENSOR TOUCH KIT
N/S	CDK1	CPMD DIAGNOSTIC KIT
N/S	801421	SCREWS CH HEAD 5MM*10MM
N/S	535401	NUT 1.5 BSP
N/S	804415	O'RING BLEED OF FUNNEL SMALL
N/S	804811	O'RING BLEED OF FUNNEL LARGE
N/S	800059	O'RING FLOAT VALVE (NIPPLE)
N/S	800103	O'RING FLOAT VALVE (VALVE STEM)
N/S	402604	1/2" BSP - 1/2" BPS NIPPLE
N/S	824949	1/2" BSP NUT & OLIVE WATER INLET
N/S	832760	CABLE SOLENOID

EXH (ICON) EXPLODED VIEW

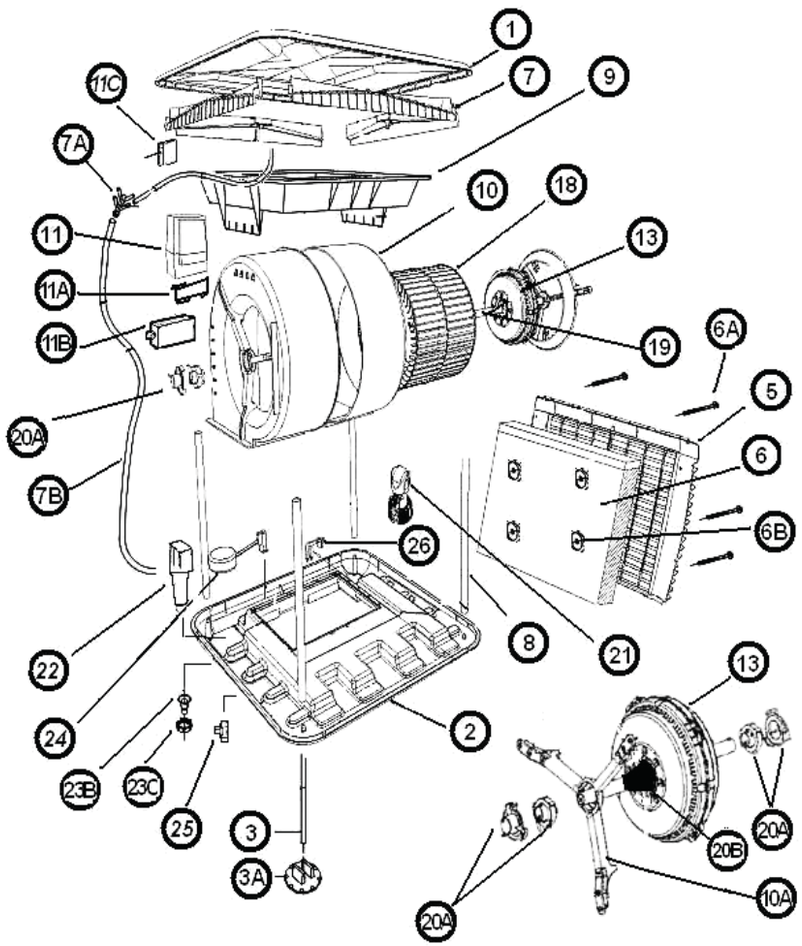

EXH 170/210 PARTS LIST CONT.		
DIA#	MFG#	DESCRIPTION
N/S	552019	SOLENOID COVER
N/S	850764	FLEXIBLE HOSE AND WASHER ASSY
N/S	816074	KIT FITTING SOLENOID
N/S	813264	COPPER TUBE STRAIGHT
N/S	661421	BRASS CONNECTOR 1/2" BSP - 1/4" BSP
N/S	825380	WASHER TAP 18.5*3 BLACK

EXVQ 155/275 VARIABLE SPEED

Breezair Model	MFG#	Industry Standard CFM	Volts	AMPS	Motor HP	Weight LB
EXVQ155	043081	5500	115	7.5	0.75 HP	168
EXVQ275	046785	7500	115	10.2	1 HP	198

EXVQ 155/275 MODEL COOLERS COME EQUIPED WITH THE FOLLOWING

- INSTALLATION KIT (AUTO DRAIN, SOLENOID, PLUMBING FITTINGS, COM CABLE)
- VARIABLE SPEED CPMD JUNCTION BOX
- VARIABLE SPEED SEELECTRIC™ MOTOR
- TORNADO WATER PUMP AND FLOAT VALVE
- CHILLCEL PADS (4)
- ROOF JACK ADAPTER 17 3/4 X 17 3/4 INCHES (EXVQ155 COOLER MODEL)
- ROOF JACK ADAPTER 19 3/4 X 19 3/4 INCHES (EXVQ275 COOLER MODEL)

PLEASE NOTE: EXVQ REQUIRES PURCHASE OF ONE OF THE FOLLOWING SPEED CONTROL

	094298	MAGIQTOUCH WIRED SPEED CONTROL KIT INCLUDES WIRED WALL CONTROL HANDSET
	118574	MAGIQTOUCH WIRELESS SPEED CONTROL KIT INCLUDES RF WIRELESS WALL CONTROL HANDSET AND RECEIVER

THE MOST COMMON REPLACEMENT PARTS

	110104	CPMD J-BOX ASSY MAGIQTOUCH
	095264	MOTOR VAR SPEED 3/4 HP (EXVQ155)
	095271	MOTOR VAR SPEED 1 HP (EXVQ275)
	095851	TORNADO PUMP 115V
	105345	AUTO DRAIN 24V
	901497	VERTICAL FLOAT VALVE
	834320	SOLENOID VALVE 24V
	833811	WATER PROBE
	114620	CHILLCEL PAD 31.5 X 17.5 X 3.5 EXVQ155
	114613	CHILLCEL PAD 31.5 X 25 X 3.5 EXVQ275
	832159	V-BELT A-47 / 4L-490 (EXVQ155)
	818054	V-BELT A-56 / 4L-580 (EXVQ275)
	109459	BEARING KIT
	094298 RP	MAGIQTOUCH WIRED WALL CONTROL HANDSET
	118550 RP	MAGIQTOUCH WIRELESS WALL CONTROL HANDSET

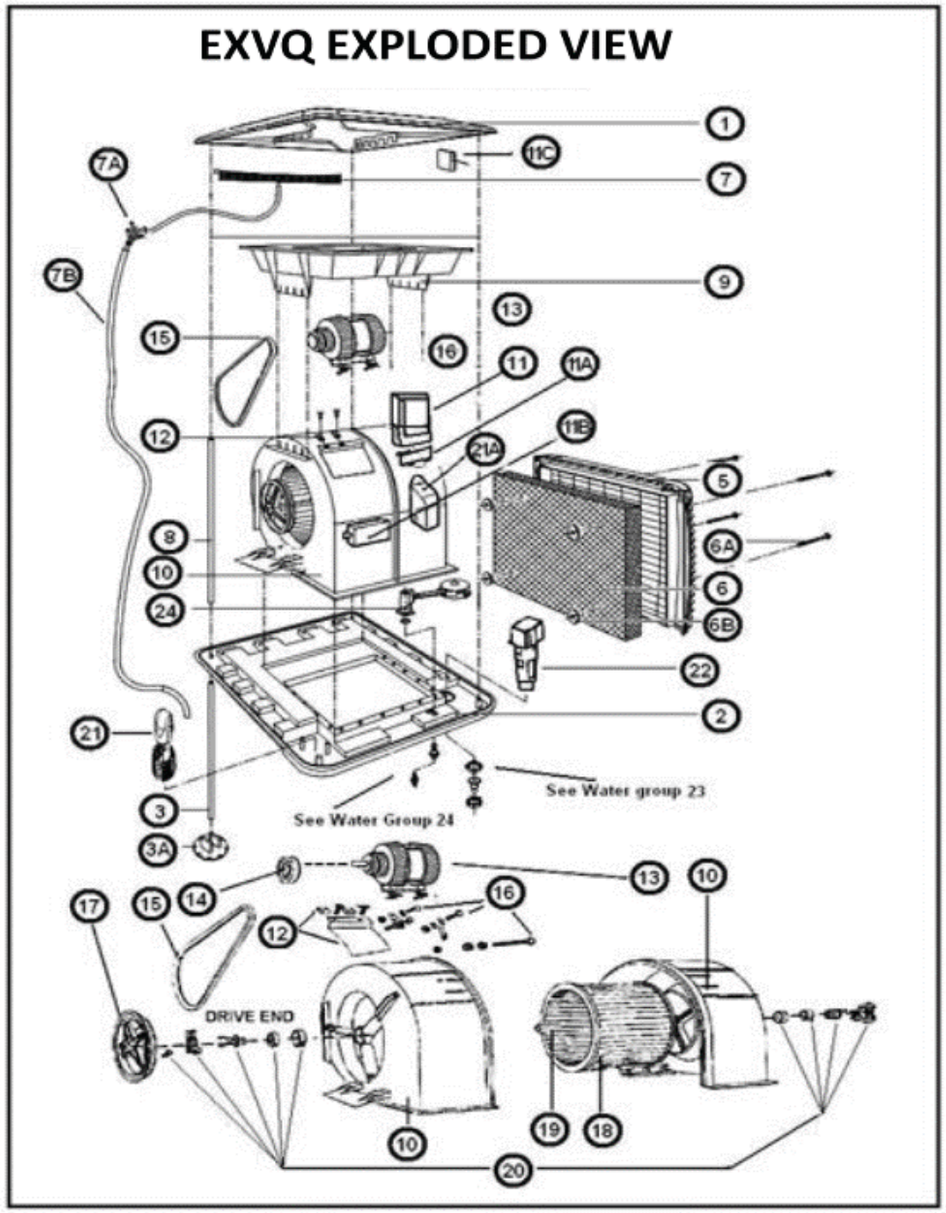

EXVQ 155/275 PARTS LIST		
DIA#	**MFG#**	**DESCRIPTION**
1	505152	LID BEIGE
1	505169	LID GREY
2	505350	TANK BEIGE
2	505367	TANK GREY
3	573625	LEG EXTENSION
3A	509518	LEG EXTENSION FOOT
5	505855	PAD FRAME BEIGE (EXVQ155)
5	505862	PAD FRAME GREY (EXVQ155)
5	505954	PAD FRAME BEIGE (EXVQ275)
5	505961	PAD FRAME GREY (EXVQ275)
6	114620	CHILLCEL PAD (EXVQ155)
6	114613	CHILLCEL PAD (EXVQ275)
6A	561067	PAD RETAINING PIN
6B	401966	PAD RETAINING DISC
7	506784	SPREADER WATER DISTRIBUTION
7A	511412	4 WAY WATER DISTRIBUTOR
7B	077254	WATER DISTRIBUTOR HOSE SET
8	507422	CORNER POST (EXVQ155)
8	507095	CORNER POST (EXVQ275)
N/S	541679	CORNER PAD CLIPS
9	508122	TRANSITION SCROLL TO LID (EXVQ275)
10	116013	SCROLL ASSEMBLY (EXVQ155)
10	116020	SCROLL ASSEMBLY (EXVQ275)
11	110104	CPMD J-BOX ASSY MAGIQTOUCH
11A	560298	CPMD J-BOX MOUNTING CRADLE
11B	834283	MAIN POWER JUNCTION BOX
11C	903316	RECEIVER ASSY RF 915MHZ
12	122441	KIT MOTOR MOUNT BRACKET (EXVQ155)
12	122458	MOTOR MOUNT PLATE (EXVQ275)
13	095264	MOTOR VAR. SPEED 3/4 HP (EXVQ155)
13	095271	MOTOR VAR. SPPED 1 HP (EXVQ275)
14	108063	MOTOR PULLEY 4"

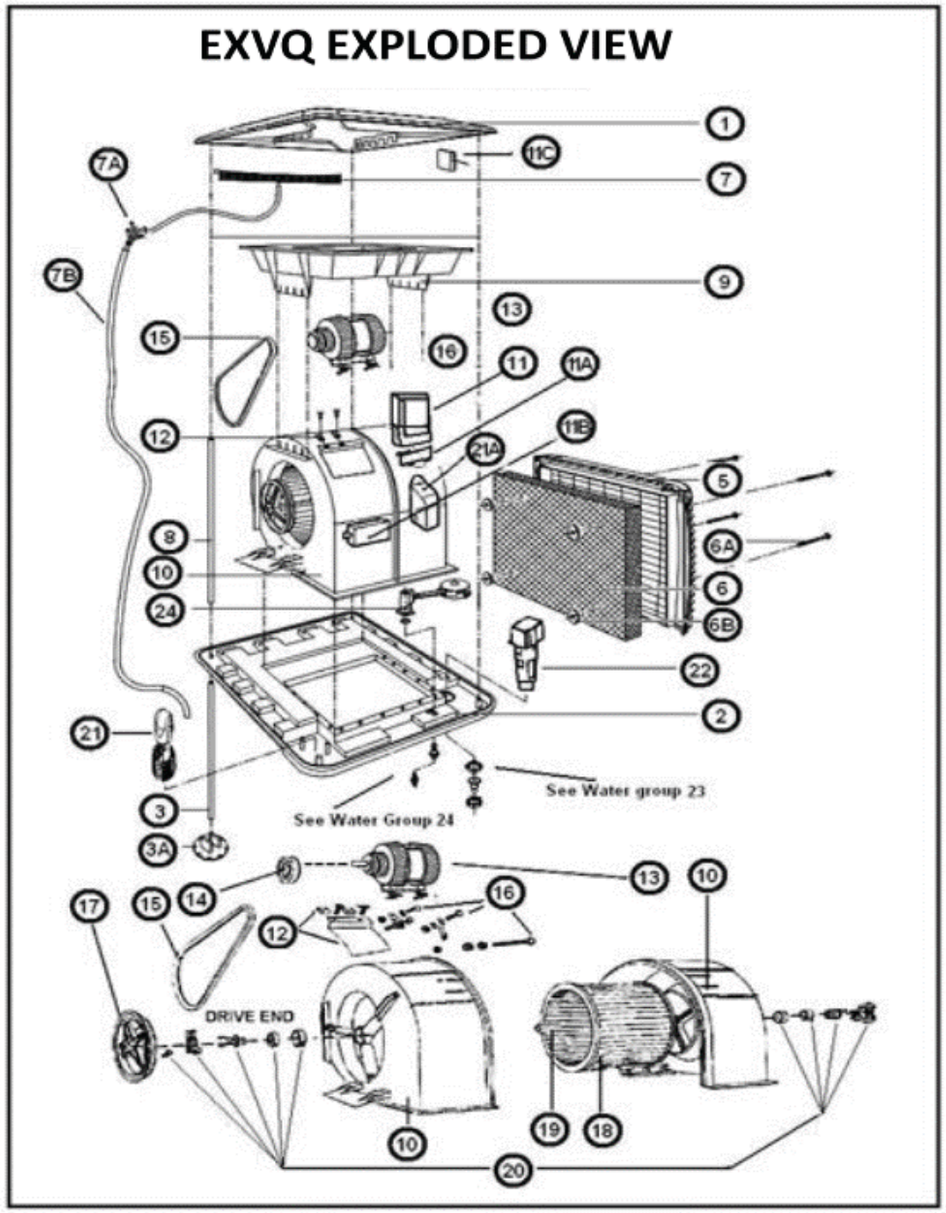

EXVQ 155/275 PARTS LIST CONT.		
DIA#	MFG#	DESCRIPTION
15	832159	V-BELT A47 / 4L490 (EXVQ155)
15	818054	V-BELT A56 / 4L580 (EXVQ275)
16	112008	INSTALLATION HARDWARE KIT
17	501710	FAN PULLEY 8" (EXVQ155)
17	501703	FAN PULLEY 9" (EXVQ275)
18	113289	FAN CENTRIFUGAL & SHAFT (EXVQ155)
18	113272	FAN CENTRIFUGAL & SHAFT (EXVQ275)
19	504605	FAN SHAFT SQUARE
20	109459	BEARING KIT
21	095851	TORNADO WATER PUMP 115V
22	105345	AUTO DRAIN 24V
24	901497	VERTICAL FLOAT VALVE
N/S	834320	SOLENOID VALVE 24V
N/S	833811	PROBE WATER SENSOR
N/S	833880	CABLE ASSY 65' 6 PIN
N/S	864402	CABLE ASSY 131' 6 PIN
N/S	861265	CABLE 15' RECEIVER RF 6 PIN
N/S	500363	BRACKET MOUNT WALL MAGIQTOUCH
N/S	857398	MAIN POWER LEAD
N/S	573649	LEG EXTENSION 990MM
N/S	529738	ROOF JACK ADAPTOR 17 3/4 (EXVQ155)
N/S	529745	ROOF JACK ADAPTOR 19 3/4 (EXVQ275)
N/S	506203	SCROLL MOTOR SIDE (EXVQ155)
N/S	506302	SCROLL NON MOTOR SIDE (EXVQ155)
N/S	506401	SCROLL MOTOR SIDE (EXVQ275)
N/S	506500	SCROLL NON MOTOR SIDE (EXVQ275)
N/S	594910	DRAIN VALVE RUBBER SEAL
N/S	593104	ADAPTER DRAIN 32-20 MM
N/S	861593	NUT DRAIN ADAPTOR
N/S	535401	NUT 1.5 BSP
N/S	804415	O'RING BLEED OF FUNNEL SMALL
N/S	804811	O'RING BLEED OF FUNNEL LARGE

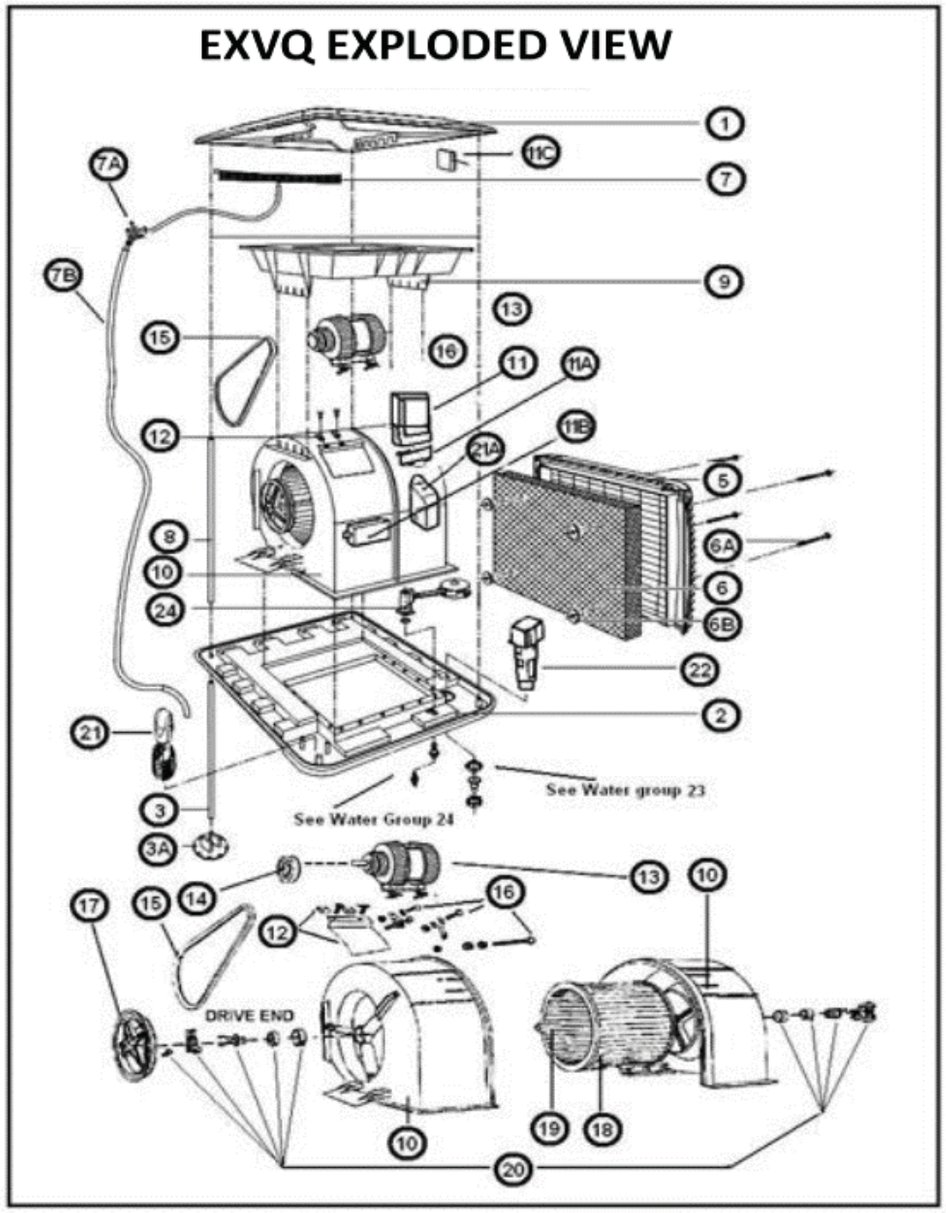

EXVQ 155/275 PARTS LIST CONT.		
DIA#	MFG#	DESCRIPTION
N/S	800059	O'RING FLOAT VALVE (NIPPLE)
N/S	800103	O'RING FLOAT VALVE (VALVE STEM)
N/S	402604	1/2" BSP - 1/2" BPS NIPPLE
N/S	110158	PUMP CONNECTOR ENCLOSURE
N/S	824949	1/2" BSP NUT & OLIVE WATER INLET
N/S	832760	CABLE SOLENOID
N/S	552019	SOLENOID COVER
N/S	850764	FLEXIBLE HOSE AND WASHER ASSY
N/S	816074	KIT FITTING SOLENOID
N/S	813264	COPPER TUBE STRAIGHT
N/S	094298RP	MAGIQTOUCH WIRED WALL CONTROL
N/S	118550RP	MAGIQTOUCH WIRELESS WALL CONTROL
N/S	661421	BRASS CONNECTOR 1/2" BSP - 1/4" BSP
N/S	931412	KIT PACKOUT EXVQ
N/S	825380	WASHER TAP 18.5*3 BLACK

EXQ 170/210 VARIABLE SPEED

Breezair Model	MFG#	Industry Standard CFM	Volts	AMPS	Motor HP	Weight LB
EXQ170	043845	7500	230	5.8	1 HP	188
EXQ210	046822	9500	230	9	1 HP	188

EXQ 170/210 MODEL COOLERS COME EQUIPED WITH THE FOLLOWING

- INSTALLATION KIT (AUTO DRAIN, SOLENOID, PLUMBING FITTINGS, COM CABLE)
- VARIABLE SPEED CPMD JUNCTION BOX
- VARIABLE SPEED SEELECTRIC™ MOTOR
- TORNADO WATER PUMP AND FLOAT VALVE
- CHILLCEL PADS (4)
- ROOF JACK ADAPTER 17 3/4 X 17 3/4 INCHES (EXQ170 COOLER MODEL)
- ROOF JACK ADAPTER 19 3/4 X 19 3/4 INCHES (EXQ210 COOLER MODEL)

PLEASE NOTE: EXQ REQUIRES PURCHASE OF ONE OF THE FOLLOWING SPEED CONTROL

	094298	MAGIQTOUCH WIRED SPEED CONTROL KIT INCLUDES WIRED WALL CONTROL HANDSET
	118574	MAGIQTOUCH WIRELESS SPEED CONTROL KIT INCLUDES RF WIRELESS WALL CONTROL HANDSET AND RECEIVER

THE MOST COMMON REPLACEMENT PARTS

	116815	CPMD J-BOX VARIABLE SPEED
	095943	EMC MOTOR VARIABLE SPEED 1 HP
	095967	EMC MOTOR VARIABLE SPEED 2 HP
	095905	TORNADO PUMP 230V
	105345	AUTO DRAIN 24V
	901497	VERTICAL FLOAT VALVE
	834320	SOLENOID VALVE 24V
	833811	WATER PROBE
	114613	CHILLCEL PAD EXQ170 (SET OF 4)
	114583	CHILLCEL PAD EXQ210 (SET OF 4)
	903316	RECEIVER ASSY RF 915MHZ
	833880	MAGIQTOUCH CABLE 6 PIN
	094298 RP	MAGIQTOUCH WIRED WALL CONTROL HANDSET
	118550 RP	MAGIQTOUCH WIRELESS WALL CONTROL HANDSET

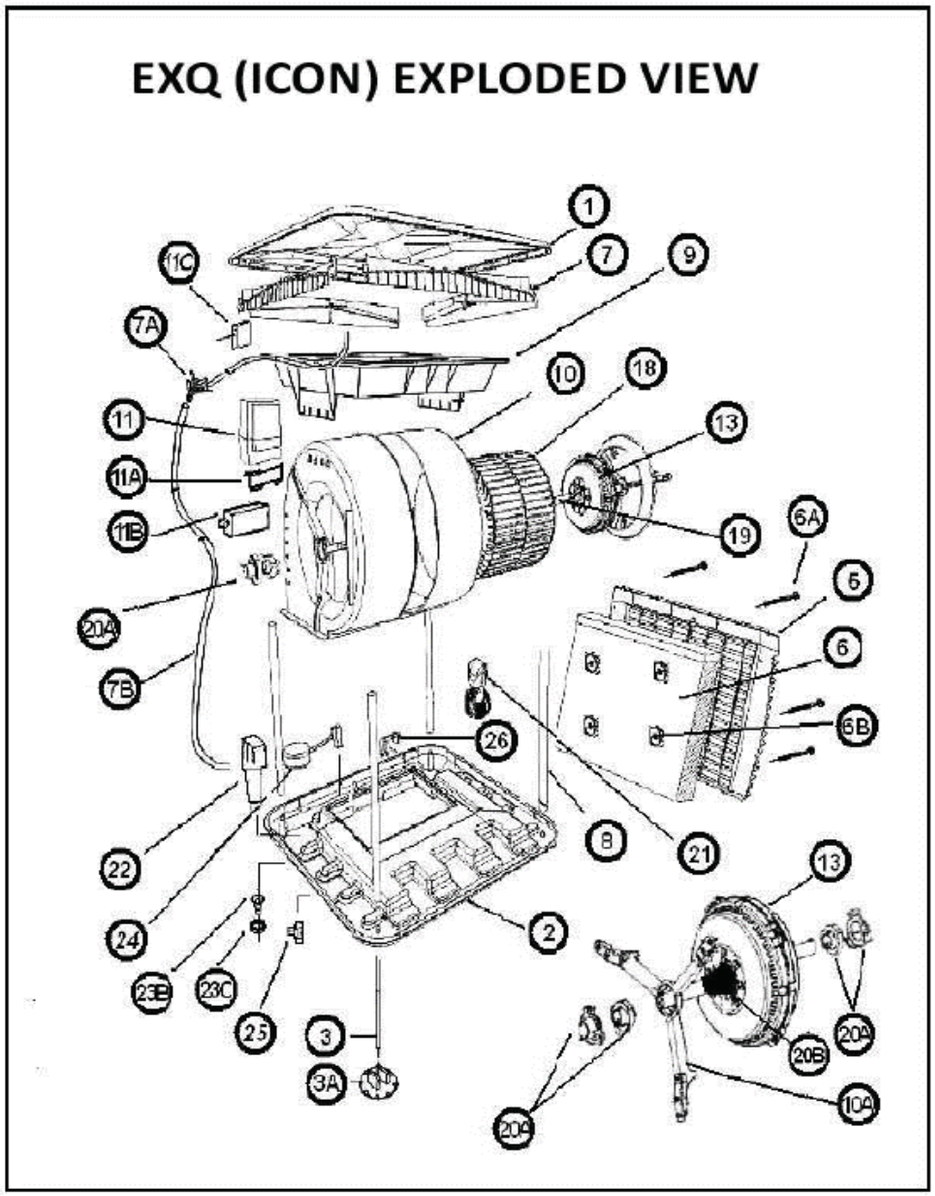

EXQ 170/210 PARTS LIST		
DIA#	**MFG#**	**DESCRIPTION**
1	505152	LID BEIGE
1	505169	LID GREY
2	505350	TANK BEIGE
2	505367	TANK GREY
3	573625	LEG EXTENSION
3A	509518	LEG EXTENSION FOOT
5	505594	PAD FRAME BEIGE
5	505961	PAD FRAME GREY
6	114613	CHILLCEL PAD EXQ170 SET OF 4
6	114583	CHILLCEL PAD EXQ210 SET OF 4
6A	561067	PAD RETAINING PIN
6B	401966	PAD RETAINING DISC
7	506784	SPREADER WATER DISTRIBUTION
7A	511412	4 WAY WATER DISTRIBUTOR
7B	077254	WATER DISTRIBUTOR HOSE SET
8	507095	CORNER POST
N/S	541679	CORNER PAD CLIPS
9	508122	TRANSITION SCROLL TO LID
10	116020	SCROLL ASSEMBLY
11	116815	CPMD J-BOX VARIABLE SPEED
11A	560878	J-BOX MOUNTING CRADLE
11B	834283	MAIN POWER JUNCTION BOX
11C	903316	RECEIVER ASSY RF 915MHZ
13	095943	EMC MOTOR VARIABLE SPEED 1 HP
13	095967	EMC MOTOR VARIABLE SPEED 2 HP
18	109312	FAN CENTRIFUGAL
19	841397	FAN SHAFT ROUND ALLOY
20A	502007	DUST END CUP
20A	543253	RESILIENT MOUNT & INSERT
20B	560793	FAN SHAFT SEAL
21	095905	TORNADO PUMP 230V
22	105345	AUTO DRAIN 24V

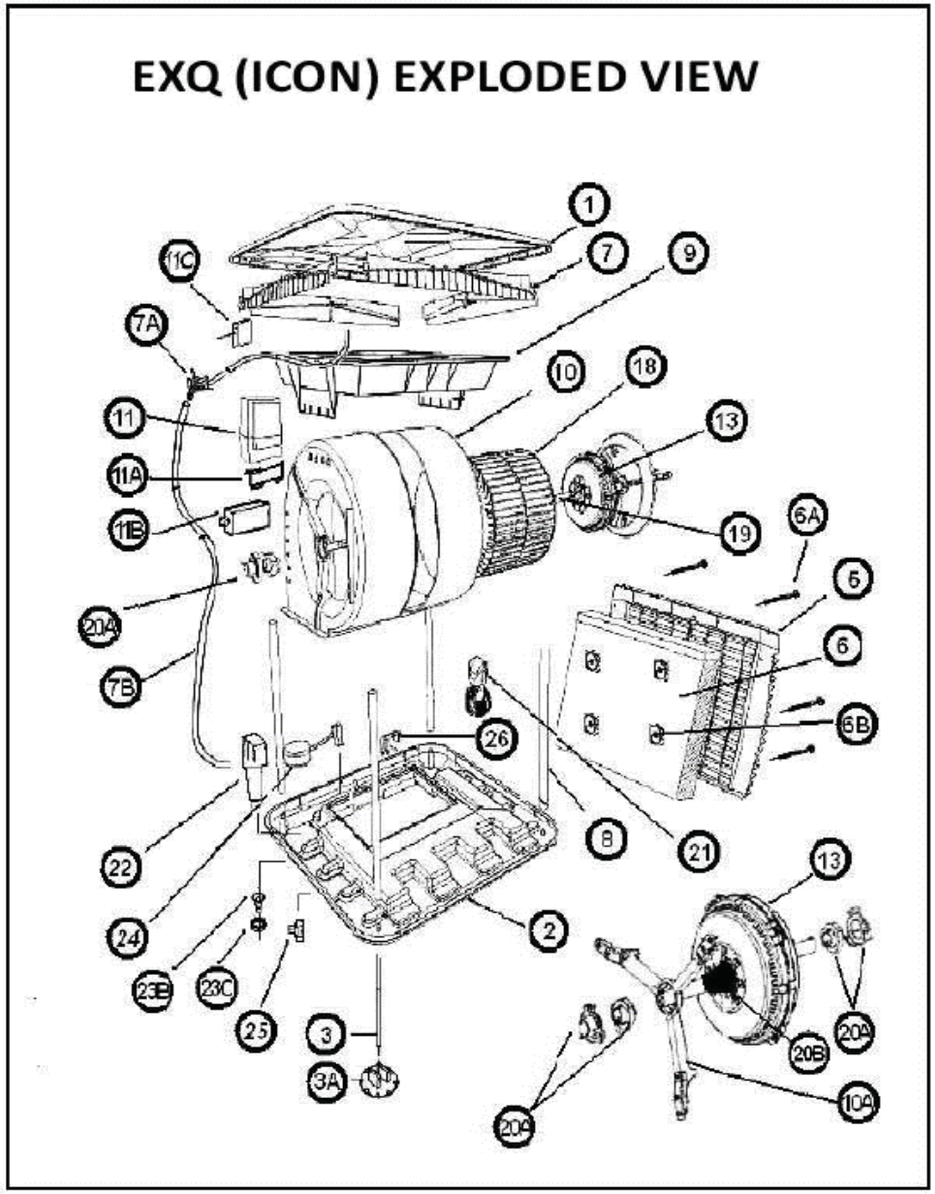

EXQ 170/210 PARTS LIST CONT.		
DIA#	MFG#	DESCRIPTION
23B	593104	ADAPTER DRAIN 32-20 MM
23C	861593	NUT DRAIN ADAPTOR
24	901497	VERTICAL FLOAT VALVE
25	834320	SOLENOID VALVE 24V
N/S	833880	CABLE ASSY 65' 6 PIN
N/S	864402	CABLE ASSY 131' 6 PIN
N/S	861265	CABLE 15' RECEIVER RF 6 PIN
N/S	500363	BRACKET MOUNT WALL MAGIQTOUCH
N/S	573649	LEG EXTENSION 990 MM
N/S	529738	ROOF JACK ADAPTOR 17 3/4 (EXQ170)
N/S	529745	ROOF JACK ADAPTOR 19 3/4 (EXQ210)
N/S	506401	SCROLL MOTOR SIDE
N/S	506500	SCROLL NON MOTOR SIDE
N/S	513805	PLATE CUT OFF
N/S	109305	SPIDER ASSEMBLT / SCROLL CUTOUT DD
N/S	857398	MAIN POWER LEAD
N/S	094298RP	MAGIQTOUCH WIRED WALL CONTROL
N/S	118550RP	MAGIQTOUCH WIRELESS WALL CONTROL
N/S	801421	SCREWS CH HEAD 5MM*10MM
N/S	535401	NUT 1.5 BSP
N/S	804415	O'RING BLEED OF FUNNEL SMALL
N/S	804811	O'RING BLEED OF FUNNEL LARGE
N/S	800059	O'RING FLOAT VALVE (NIPPLE)
N/S	800103	O'RING FLOAT VALVE (VALVE STEM)
N/S	402604	1/2" BSP - 1/2" BPS NIPPLE
N/S	824949	1/2" BSP NUT & OLIVE WATER INLET
N/S	832760	CABLE SOLENOID
N/S	833811	PROBE WATER SENSOR
N/S	094298RP	MAGIQTOUCH WIRED WALL CONTROL
N/S	118550RP	MAGIQTOUCH WIRELESS WALL CONTROL
N/S	594910	DRAIN VALVE RUBBER SEAL
N/S	661421	BRASS CONNECTOR 1/2" BSP - 1/4" BSP

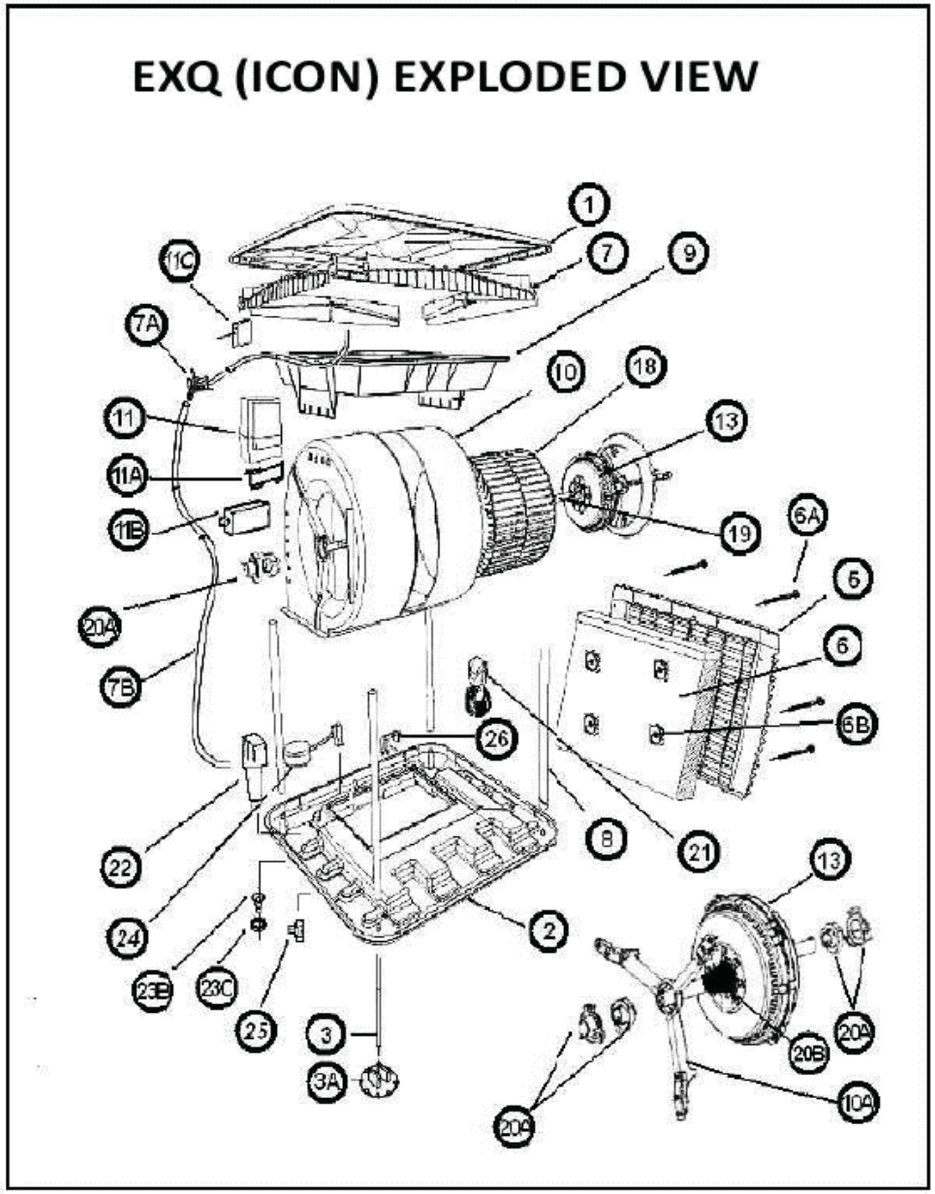

EXQ 170/210 PARTS LIST CONT.		
DIA#	MFG#	DESCRIPTION
N/S	861593	NUT DRAIN ADAPTOR
N/S	535401	NUT 1.5 BSP
N/S	804415	O'RING BLEED OF FUNNEL SMALL
N/S	804811	O'RING BLEED OF FUNNEL LARGE
N/S	800059	O'RING FLOAT VALVE (NIPPLE)
N/S	800103	O'RING FLOAT VALVE (VALVE STEM)
N/S	402604	1/2" BSP - 1/2" BPS NIPPLE
N/S	824949	1/2" BSP NUT & OLIVE WATER INLET
N/S	552019	SOLENOID COVER
N/S	850764	FLEXIBLE HOSE AND WASHER ASSY
N/S	816074	KIT FITTING SOLENOID
N/S	813264	COPPER TUBE STRAIGHT
N/S	931412	KIT PACKOUT EXQ
N/S	825380	WASHER TAP 18.5*3 BLACK

CTA 250 2-SPEED AXIAL FAN

Convair Model	MFG#	Industry Standard CFM	Volts	AMPS	Motor HP	Weight LB
CTA250	226316	6000	115	6	400W	134

CTA250 MODEL COOLER COME EQUIPPED WITH THE FOLLOWING

- ELECTRICAL ENCLOSURE
- MOTOR 2 SPEED 330W 115V
- TORNADO PUMP 115V
- ROOF JACK TRANSITION ASSEMBLY 21 5/8 X 21 5/8 INCHES
- CHILLCEL PADS (4)
- MANUAL BLEED-OFF TRAY
- ROOF JACK ADAPTER 17 3/4 X 17 3/4 INCHES
- LEG SUPPORT KIT (SET OF 4)

OPTIONS

	MFG#	DESCRIPTION
	529745	19 3/4 X 19 3/4 ROOF JACK ADAPTER SET OF 4
	118789	PURGE PUMP INSTALLATION KIT NOTE: PURGE PUMP NOT INCLUDED
	122526	KIT WEATHERSEAL L/R AXIAL USA *Requires 21 5/8 square raw edged roof jack. Refer to technical specifications for more information. NOTE: Units will not operate with any of the Breezair roof jack adapters.*

THE MOST COMMON REPLACEMENT PARTS

	959529 RP	ELECTRICAL ENCLOSURE CTA250
	872247 RP	MOTOR 2-SPEED 400W
	097091	TORNADO PUMP 115V / 60HZ
	901497	VERTICAL FLOAT VALVE
	560342	BLEED FUNNEL
	114590 P65	CHILLCEL PAD 33.5 X 14.75 X 3.5 (SET OF 4)
	561067	PAD RETAINING OIN
	401966	PAD RETAINING DISC
	804415	O-RING BS 128 38ID BLEED FUNNEL
	560922	FAN AXIAL

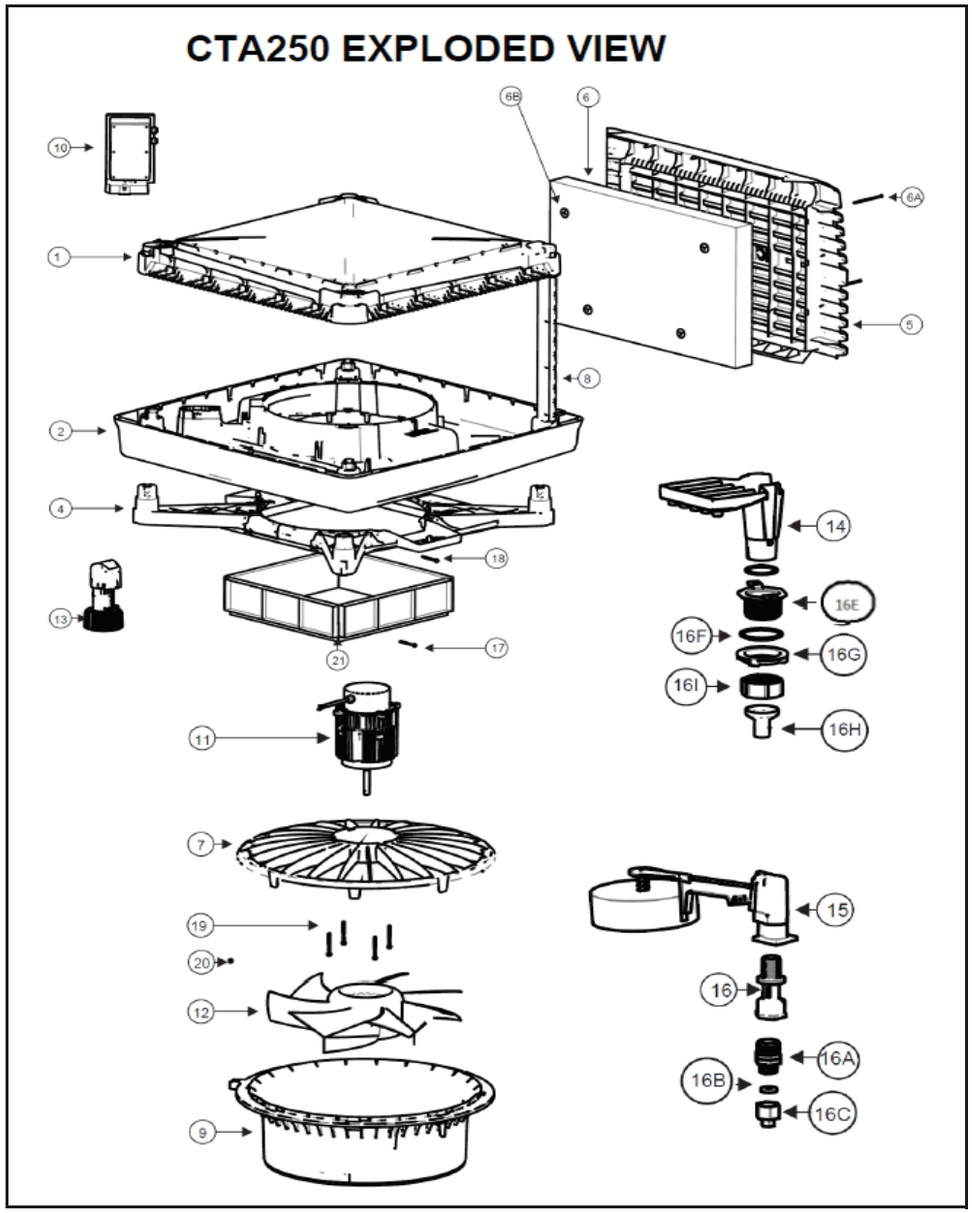

CTA 250 PARTS LIST		
DIA#	**MFG#**	**DESCRIPTION**
1	560021	LID AND SPREADER ASSEMBLY BEIGE
2	560069RP	TANK ASSEMBLY BEIGE
N/S	113098	LEG SUPPORT KIT WITH FOOT (SET OF 4)
N/S	509518	LEG EXTENSION FOOT
4	560212	TRANSITION PIECE
5	560670	PAD FRAME MEDIUM
6	114590P65	CHILLCEL PAD 33.5 X 14.75 X 3.5
6A	561067	PAD RETAINING PIN
6B	401966	PAD RETAINING DISC
7	560946	MOTOR MOUNT SUPERSTEALTH
8	560250	PILLAR CORNER POST MEDIUM
9	113085	FAN INLET RING
10	959529RP	ELECTRICAL ENCLOSURE CTA250
11	872247RP	MOTOR 2-SPEED 400W 115V / 60HZ
12	560922	FAN AXIAL
13	097091	TORNADO PUMP 115V 60HZ
14	560342	BLEED FUNNEL
15	901497	VERTICAL FLOAT VALVE
16	902830RP	TUBE EXTENSION ASSY , O-RING & WASHER
16A	861586	ADAPTER 3/4 - 1/2 BSP
16B	825380	WASHER TAP 18.5*3 BLACK
16C	661421	BRASS CONNECTOR 1/2" BSP - 1/4" BSP
16D	804415	O-RING BS 128 38ID
16E	935409	V BUSH & NUT 1.5 BSP
16G	535401	NUT 1.5 BSP
16F	804811	O-RING BS 830 48.9ID
16H	593104	ADAPTER DRAIN 32-20 MM
16I	861593	NUT PIPE FITTING 1.5 BSP
17	902081	TRANSITION SCREWS
18	902082	DUCT SCREWS
19	865250	SCREW M5X65 ZP HEX WASHER
20	861609	GRUB SCREW

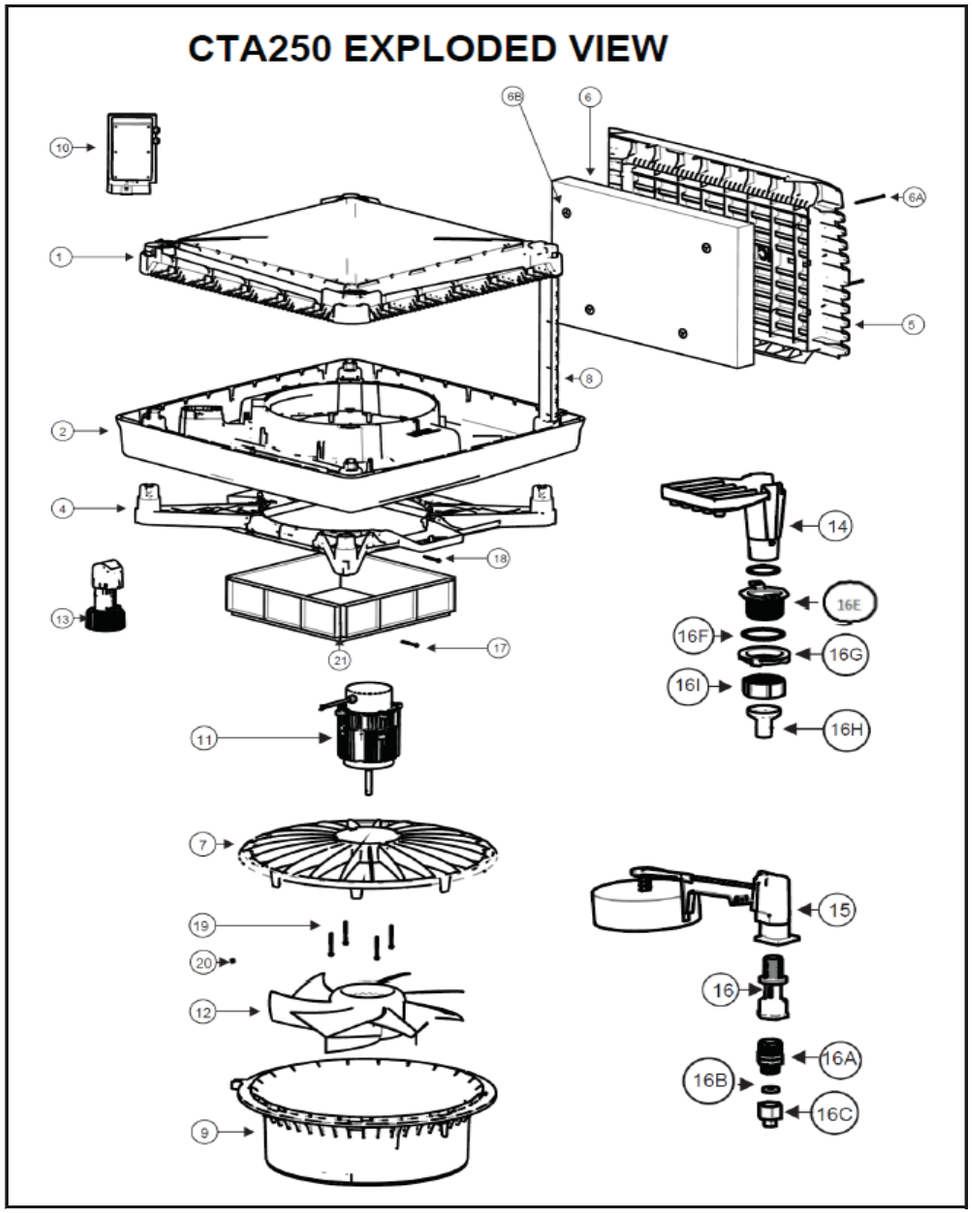

CTA 250 PARTS LIST CONT.		
DIA#	MFG#	DESCRIPTION
21	529738	ROOF JACK ADAPTER 17 3/4 X 17 3/4
21	529745	ROOF JACK ADAPTOR 19 3/4 X 19 3/4
N/S	831763	FUSE 3AG 3A SLOW BLOW
N/S	832074	FUSE 4A SLOW BLOW
N/S	831787	FUSE 8A SLOW BLOW
N/S	118789	PURGE PUMP INSTALLATION KIT
N/S	122526	KIT WEATHERSEAL L/R AXIAL
N/S	118790	DISCONNECT SWITCH
N/S	901973	KIT PACKOUT CTA250

CTA 500 2-SPEED AXIAL FAN

Convair Model	MFG#	Industry Standard CFM	Volts	AMPS	Motor HP	Weight LB
CTA500	226217	8500	115	13/10	950W	150

CTA500 MODEL COOLER COME EQUIPPED WITH THE FOLLOWING

- ELECTRICAL ENCLOSURE
- MOTOR 2 SPEED 950W 115V
- TORNADO PUMP 115V
- ROOF JACK TRANSITION ASSEMBLY 21 5/8 X 21 5/8 INCHES
- CHILLCEL PADS (4)
- MANUAL BLEED-OFF TRAY
- ROOF JACK ADAPTER 19 3/4 X 19 3/4 INCHES
- LEG SUPPORT KIT (SET OF 4)

OPTIONS

	MFG#	DESCRIPTION
	529738	17 3/4 X 17 3/4 ROOF JACK ADAPTER SET OF 4
	118789	PURGE PUMP INSTALLATION KIT NOTE: PURGE PUMP NOT INCLUDED
	122526	KIT WEATHERSEAL L/R AXIAL USA *Requires 21 5/8 square raw edged roof jack. Refer to technical specifications for more information. NOTE: Units will not operate with any of the Breezair roof jack adapters.*

THE MOST COMMON REPLACEMENT PARTS

	111254	ELECTRICAL ENCLOSURE CTA500
	872216 RP	MOTOR 2-SPEED 950W
	097091	TORNADO PUMP 115V / 60HZ
	901497	VERTICAL FLOAT VALVE
	560342	BLEED FUNNEL
	114606	CHILLCEL PAD 33.5 X 20.75 X 3.5 (SET OF 4)
	561067	PAD RETAINING OIN
	401966	PAD RETAINING DISC
	804415	O-RING BS 128 38ID BLEED FUNNEL
	560922	FAN AXIAL

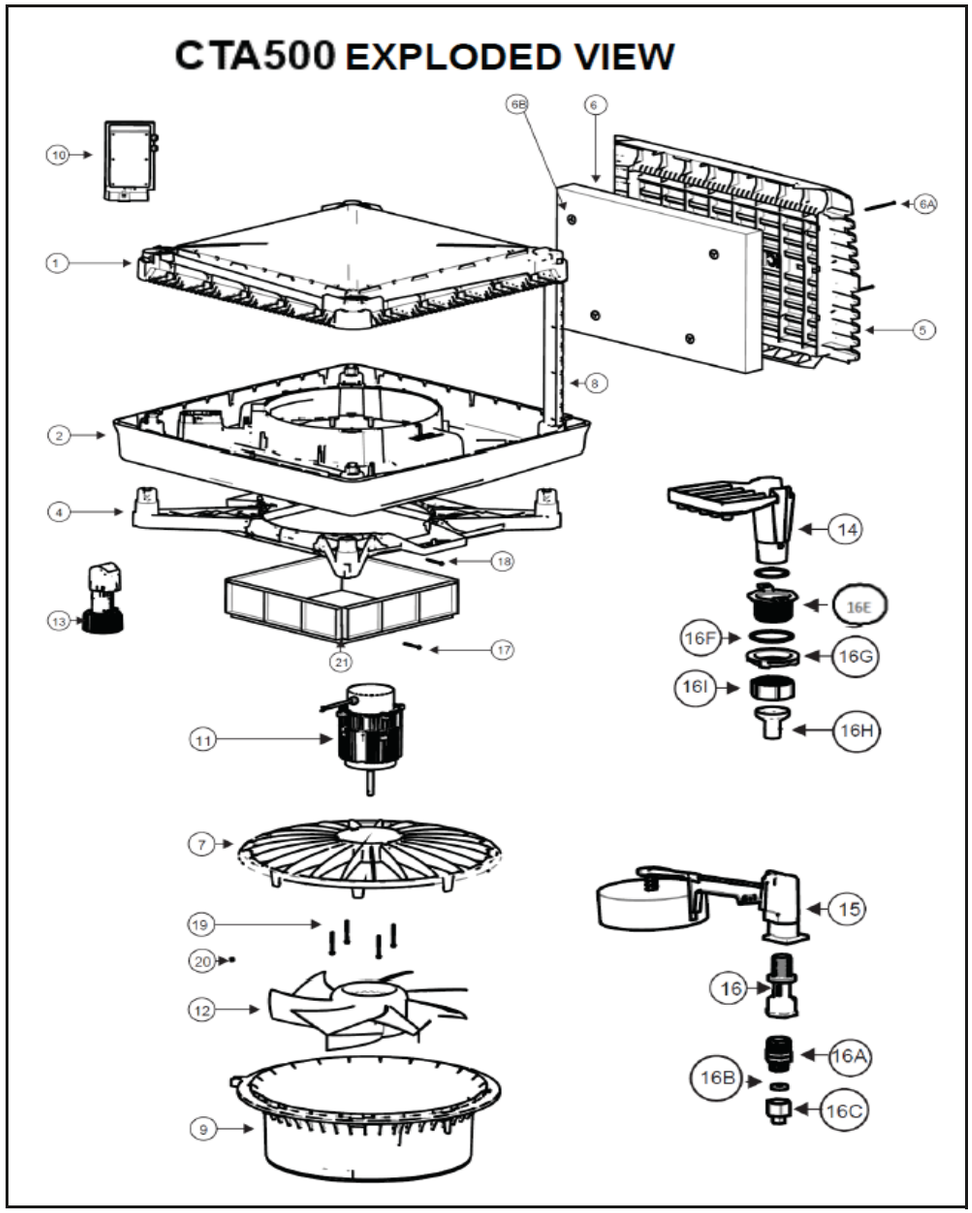

CTA 500 PARTS LIST		
DIA#	**MFG#**	**DESCRIPTION**
1	560021	LID AND SPREADER ASSEMBLY BEIGE
2	560069RP	TANK ASSEMBLY BEIGE
N/S	113098	LEG SUPPORT KIT WITH FOOT (SET OF 4)
N/S	509518	LEG EXTENSION FOOT
4	560212	TRANSITION PIECE
5	560731	PAD FRAME LARGE
6	114606	CHILLCEL PAD 33.5 X 20.75 X 3.5
6A	561067	PAD RETAINING PIN
6B	401966	PAD RETAINING DISC
7	560946	MOTOR MOUNT SUPERSTEALTH
8	560236	PILLAR CORNER POST MEDIUM
9	113085	FAN INLET RING
10	111254	ELECTRICAL ENCLOSURE CTA500
11	872216RP	MOTOR 2-SPEED 950W 115V / 60HZ
12	560922	FAN AXIAL
13	097091	TORNADO PUMP 115V 60HZ
14	560342	BLEED FUNNEL
15	901497	VERTICAL FLOAT VALVE
16	902830RP	TUBE EXTENSION ASSY , O-RING & WASHER
16A	861586	ADAPTER 3/4 - 1/2 BSP
16B	825380	WASHER TAP 18.5*3 BLACK
16C	661421	BRASS CONNECTOR 1/2" BSP - 1/4" BSP
16D	804415	O-RING BS 128 38ID
16E	935409	V BUSH & NUT 1.5 BSP
16G	535401	NUT 1.5 BSP
16F	804811	O-RING BS 830 48.9ID
16H	593104	ADAPTER DRAIN 32-20 MM
16I	861593	NUT PIPE FITTING 1.5 BSP
17	902081	TRANSITION SCREWS
18	902082	DUCT SCREWS
19	865250	SCREW M5X65 ZP HEX WASHER
20	861609	GRUB SCREW

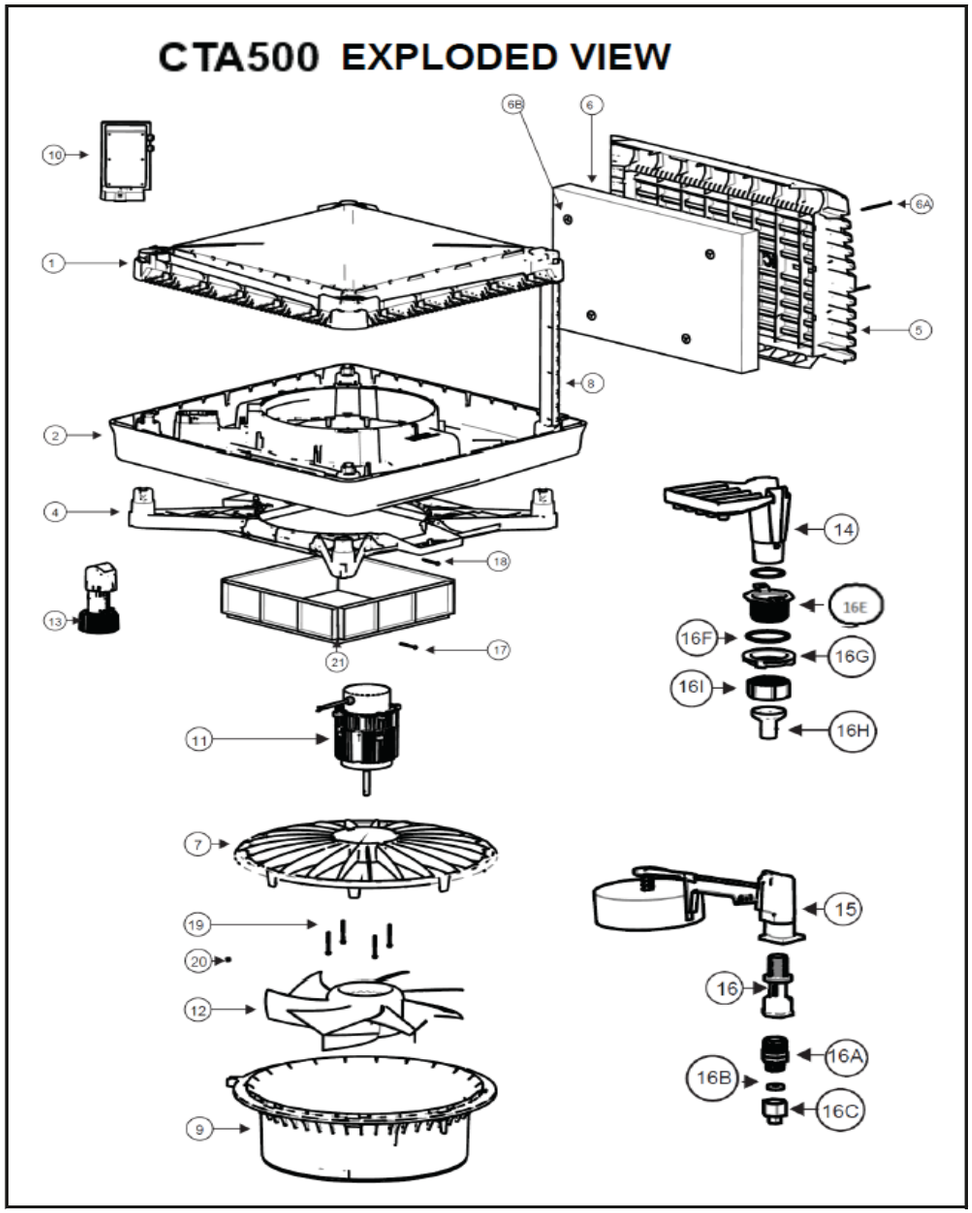

CTA 500 PARTS LIST CONT.		
DIA#	MFG#	DESCRIPTION
21	529738	ROOF JACK ADAPTER 17 3/4 X 17 3/4
21	529745	ROOF JACK ADAPTOR 19 3/4 X 19 3/4
N/S	831763	FUSE 3AG 3A SLOW BLOW
N/S	831794	FUSE 3AB 10A SLOW BLOW
N/S	832142	FUSE 3AB 15A SLOW BLOW
N/S	118789	PURGE PUMP INSTALLATION KIT
N/S	122526	KIT WEATHERSEAL L/R AXIAL
N/S	118790	DISCONNECT SWITCH
N/S	901972	KIT PACKOUT CTA500

TBQI 5500 VAR-SPEED AXIAL FAN

Convair Model	MFG#	Industry Standard CFM	Volts	AMPS	Motor HP	Weight LB
TBQI5500	226323	5500	115	5.5	300W	138

TBQI5500 MODEL COOLER COME EQUIPPED WITH THE FOLLOWING

- VARIABLE SPPED ICPMD JUNCION BOX, DIRECT DRIVE MOTOR / FAN
- TORNADO PUMP 115V , FLOAT VALVE, CHILLCEL PADS (4)
- LEG SUPPORT KIT (SET OF 4), ROOF JACK ADAPTER 17 3/4 X 17 3/4 INCHES
- ROOF JACK TRANSITION ASSEMBLY 21 5/8 X 21 5/8 INCHES
- INSTALLATION KIT (WATER MANAGER, AUTO DRAIN, COM CABLE, PLUMBING FITTINGS)

PLEASE NOTE: TBQI REQUIRES PURCHASE OF ONE OF THE FOLLOWING SPEED CONTROL

	094298	MAGIQTOUCH WIRED SPEED CONTROL KIT INCLUDES WIRED WALL CONTROL HANDSET
	118574	MAGIQTOUCH WIRELESS SPEED CONTROL KIT INCLUDES RF WIRELESS WALL CONTROL HANDSET AND RECEIVER

OPTIONS

	094274	MAGIQTOUCH MULTI COOLER LINK MODULE
	094328	MAGIQTOUCH AIR SENSOR INTERNAL
	117324	MAGIQTOUCH AIR SENSOR EXTERNAL
	122526	KIT WEATHERSEAL L/R AXIAL USA *Requires 21 5/8 square raw edged roof jack. Refer to technical specifications for more information. NOTE: Units will not operate with any of the Breezair roof jack adapters.*

THE MOST COMMON REPLACEMENT PARTS

	118444 RP	ICPMD J-BOX VARIABLE SPEED
	118420 RP	MOTOR VARIABLE SPEED 300W
	118413 RP	TORNADO PUMP 115V
	116389	AUTO DRAIN 12V
	901497	VERTICAL FLOAT VALVE
	865607	SOLENOID VALVE 12V
	865621	WATER PROBE 2 PIN
	114590 P65	CHILLCEL PAD 33.5 X 14.75 X 3.5 (SET OF 4)
	903316	RECEIVER ASSY RF 915MHZ
	833880	MAGIQTOUCH CABLE 6 PIN
	094298 RP	MAGIQTOUCH WIRED WALL CONTROL HANDSET
	118550 RP	MAGIQTOUCH WIRELESS WALL CONTROL HANDSET

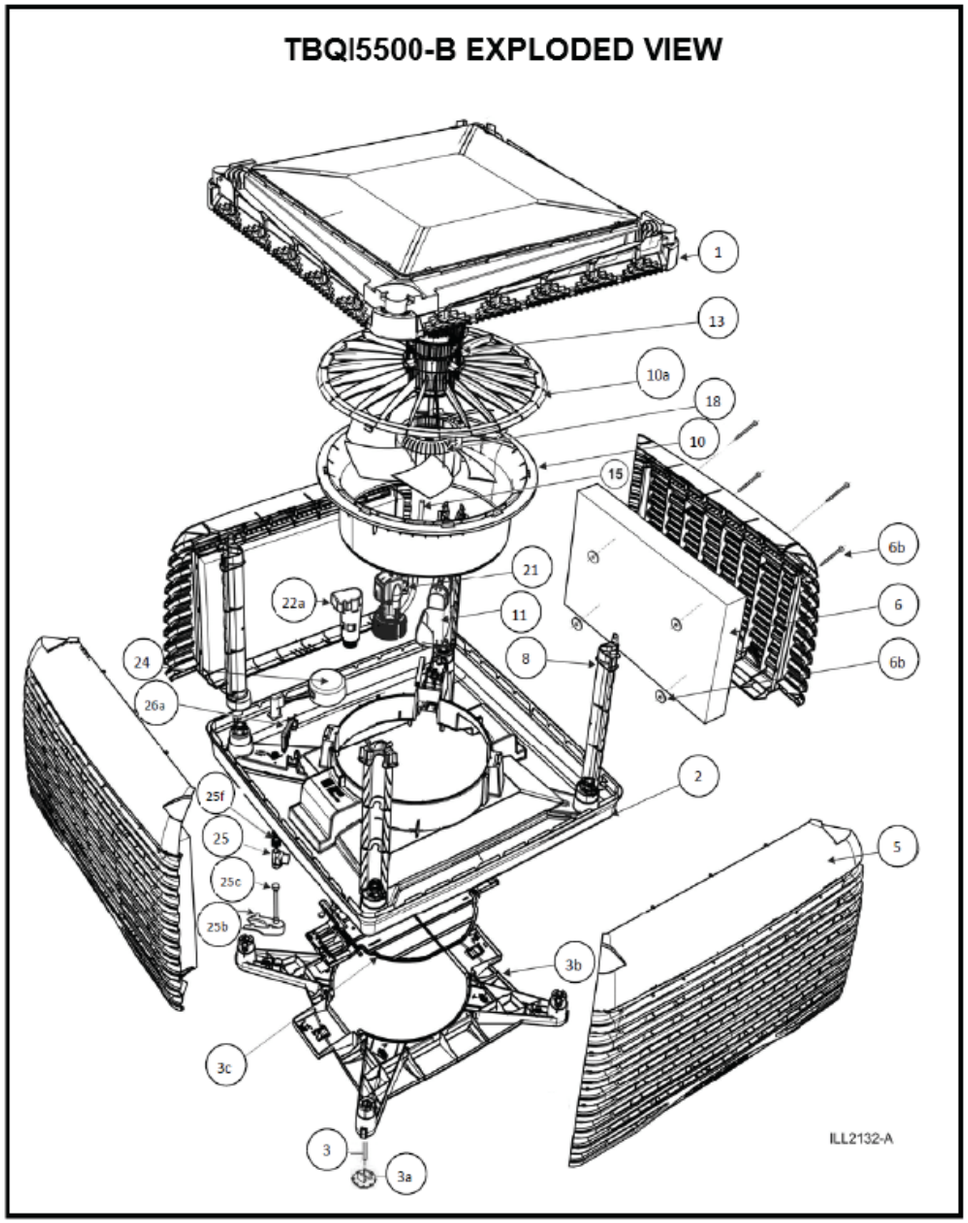

TBQI 5500 PARTS LIST		
DIA#	**MFG#**	**DESCRIPTION**
1	560021	LID AND SPREADER ASSEMBLY BEIGE
2	560069RP	TANK ASSEMBLY BEIGE
3	113098	LEG SUPPORT KIT WITH FOOT (SET OF 4)
3A	509518	LEG EXTENSION FOOT
3B	560212	TRANSITION PIECE
N/S	529738	ROOF JACK ADAPTER 17 3/4 X 17 3/4
5	560564	PAD FRAME MEDIUM BEIGE
6	114590P65	CHILLCEL PAD 33.5 X 14.75 X 3.5
6B	561067	PAD RETAINING PIN
6B	401966	PAD RETAINING DISC
8	560250	PILLAR CORNER POST MEDIUM
10	113085	FAN INLET RING
10A	560946	MOTOR MOUNT SUPERSTEALTH
11	118444RP	ICPMD J-BOX VARIABLE SPEED
13	118420RP	MOTOR VARIABLE SPEED 300W
18	560922	FAN AXIAL
21	118413RP	TORNADO PUMP 115V
22	116389	AUTO DRAIN 12V
24	901497	VERTICAL FLOAT VALVE
25	865607	SOLENOID VALVE 12V
25C	850764	FLEXIBLE HOSE AND WASHER ASSY
25F	902830RP	TUBE EXTENSION ASSY , O-RING & WASHER
26A	865621	WATER PROBE 2 PIN
N/S	861609	GRUB SCREW
N/S	865250	SCREW M5X65 ZP HEX WASHER
N/S	833880	CABLE ASSY 65' 6 PIN
N/S	864402	CABLE ASSY 131' 6 PIN
N/S	500363	BRACKET MOUNT WALL MAGIQTOUCH
N/S	861265	CABLE 15' RECEIVER RF 6 PIN
N/S	593104	ADAPTER DRAIN 32-20 MM
N/S	861593	NUT DRAIN ADAPTOR
N/S	535401	NUT 1.5 BSP

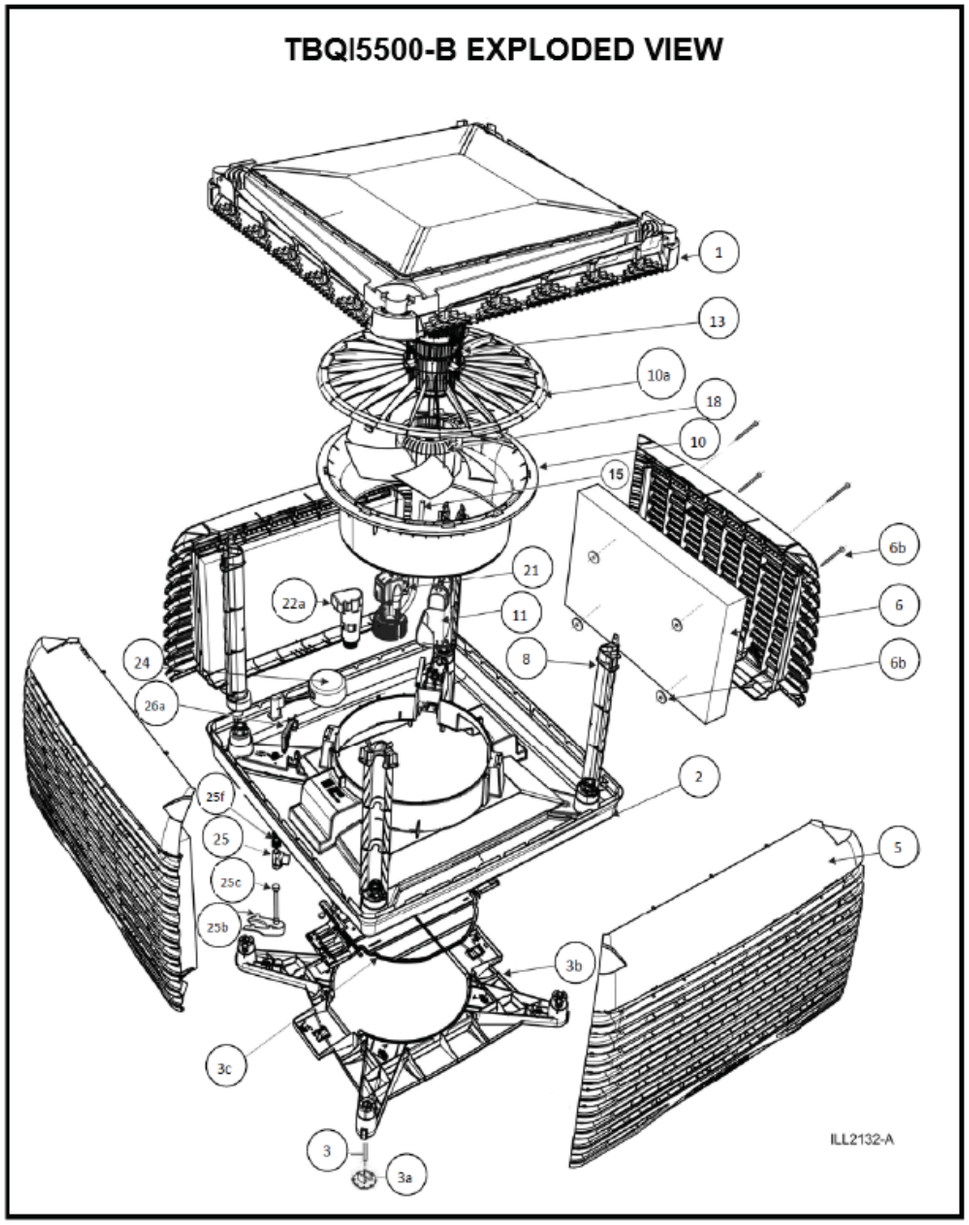

TBQI 5500 PARTS LIST CONT.		
DIA#	MFG#	DESCRIPTION
N/S	804811	O'RING BLEED OF FUNNEL LARGE
N/S	800059	O'RING FLOAT VALVE (NIPPLE)
N/S	800103	O'RING FLOAT VALVE (VALVE STEM)
N/S	816074	KIT FITTING SOLENOID
N/S	813264	COPPER TUBE STRAIGHT
N/S	094298RP	MAGIQTOUCH WIRED WALL CONTROL
N/S	118550RP	MAGIQTOUCH WIRELESS WALL CONTROL
N/S	903316	RECEIVER ASSY RF 915MHZ
N/S	094274	MAGIQTOUCH LINK MODULE
N/S	094328	MAGIQTOUCH AIR SENSOR INTERNAL
N/S	117324	MAGIQTOUCH AIR SENSOR EXTERNAL
N/S	122526	KIT WEATHERSEAL L/R AXIAL
N/S	820934	MAIN POWER LEAD STREIGHT
N/S	661421	BRASS CONNECTOR 1/2" BSP - 1/4" BSP
N/S	904171	KIT PACKOUT TBQI
N/S	825380	WASHER TAP 18.5*3 BLACK

TBQI 7500 VAR-SPEED AXIAL FAN

Convair Model	MFG#	Industry Standard CFM	Volts	AMPS	Motor HP	Weight LB
TBQI7500	226330	7500	115	7	380W	155

TBQI7500 MODEL COOLER COME EQUIPPED WITH THE FOLLOWING

- VARIABLE SPPED ICPMD JUNCION BOX, DIRECT DRIVE MOTOR / FAN
- TORNADO PUMP 115V , FLOAT VALVE, CHILLCEL PADS (4)
- LEG SUPPORT KIT (SET OF 4), ROOF JACK ADAPTER 19 3/4 X 19 3/4 INCHES
- ROOF JACK TRANSITION ASSEMBLY 21 5/8 X 21 5/8 INCHES
- INSTALLATION KIT (WATER MANAGER, AUTO DRAIN, COM CABLE, PLUMBING FITTINGS)

PLEASE NOTE: TBQI REQUIRES PURCHASE OF ONE OF THE FOLLOWING SPEED CONTROL

	094298	MAGIQTOUCH WIRED SPEED CONTROL KIT INCLUDES WIRED WALL CONTROL HANDSET
	118574	MAGIQTOUCH WIRELESS SPEED CONTROL KIT INCLUDES RF WIRELESS WALL CONTROL HANDSET AND RECEIVER

OPTIONS

	094274	MAGIQTOUCH MULTI COOLER LINK MODULE
	094328	MAGIQTOUCH AIR SENSOR INTERNAL
	117324	MAGIQTOUCH AIR SENSOR EXTERNAL
	122526	KIT WEATHERSEAL L/R AXIAL USA *Requires 21 5/8 square raw edged roof jack. Refer to technical specifications for more information. NOTE: Units will not operate with any of the Breezair roof jack adapters.*

THE MOST COMMON REPLACEMENT PARTS

	118444 RP	ICPMD J-BOX VARIABLE SPEED
	118437 RP	MOTOR VARIABLE SPEED 380W
	118413 RP	TORNADO PUMP 115V
	116389	AUTO DRAIN 12V
	901497	VERTICAL FLOAT VALVE
	865607	SOLENOID VALVE 12V
	865621	WATER PROBE 2 PIN
	114606	CHILLCEL PAD 33.5 X 20.75 X 3.5 (SET OF 4)
	903316	RECEIVER ASSY RF 915MHZ
	833880	MAGIQTOUCH CABLE 6 PIN
	094298 RP	MAGIQTOUCH WIRED WALL CONTROL HANDSET
	118550 RP	MAGIQTOUCH WIRELESS WALL CONTROL HANDSET

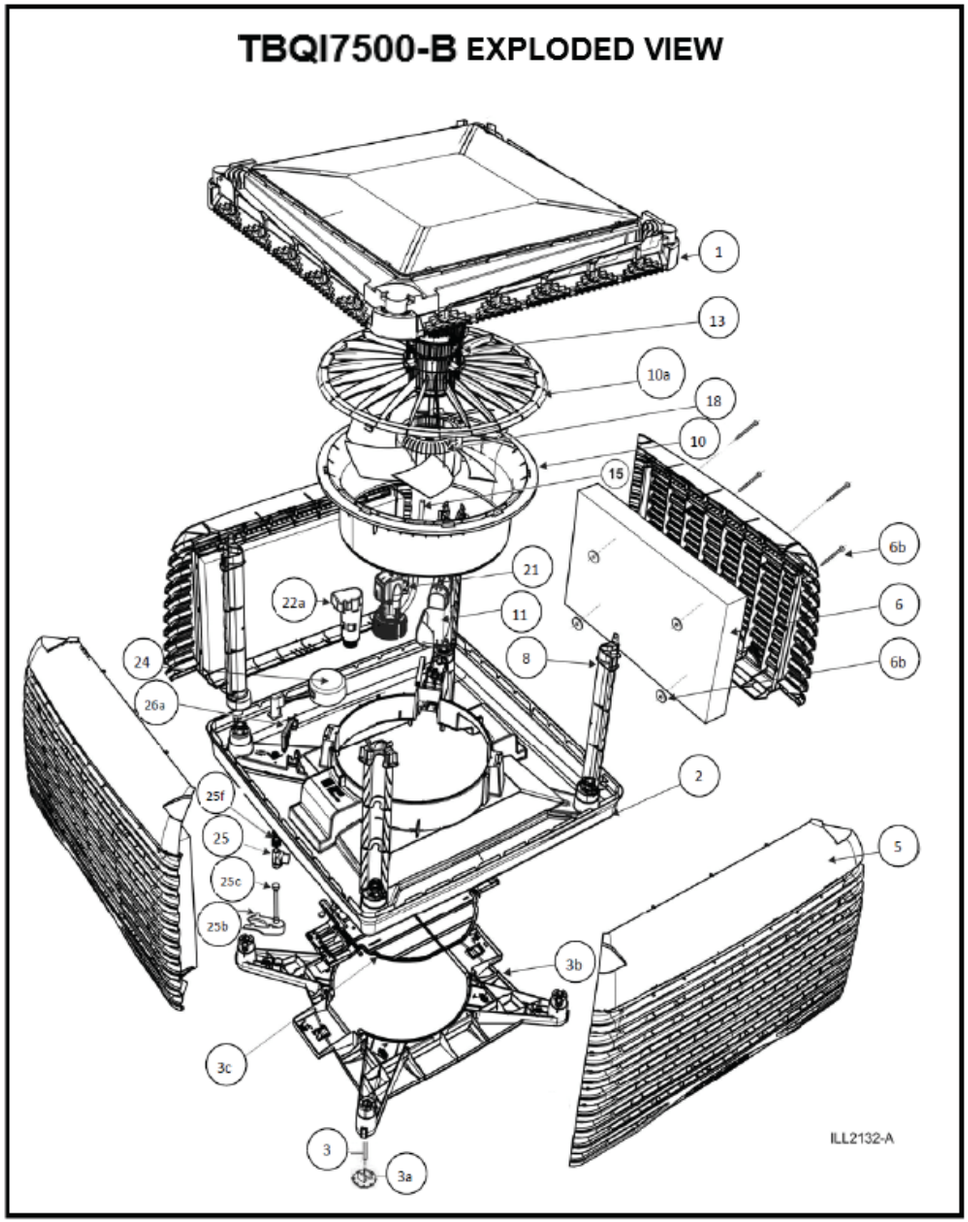

TBQI 7500 PARTS LIST		
DIA#	MFG#	DESCRIPTION
1	560021	LID AND SPREADER ASSEMBLY BEIGE
2	560069RP	TANK ASSEMBLY BEIGE
3	113098	LEG SUPPORT KIT WITH FOOT (SET OF 4)
3A	509518	LEG EXTENSION FOOT
3B	560212	TRANSITION PIECE
N/S	529745	ROOF JACK ADAPTER 19 3/4 X 19 3/4
5	560601	PAD FRAME LARGE BEIGE
6	114606	CHILLCEL PAD 33.5 X 20.75 X 3.5
6B	561067	PAD RETAINING PIN
6B	401966	PAD RETAINING DISC
8	560236	PILLAR CORNER POST LARGE
10	113085	FAN INLET RING
10A	560946	MOTOR MOUNT SUPERSTEALTH
11	118444RP	ICPMD J-BOX VARIABLE SPEED
13	118437RP	MOTOR VARIABLE SPEED 380W
18	560922	FAN AXIAL
21	118413RP	TORNADO PUMP 115V
22	116389	AUTO DRAIN 12V
24	901497	VERTICAL FLOAT VALVE
25	865607	SOLENOID VALVE 12V
25C	850764	FLEXIBLE HOSE AND WASHER ASSY
25F	902830RP	TUBE EXTENSION ASSY , O-RING & WASHER
26A	865621	WATER PROBE 2 PIN
N/S	861609	GRUB SCREW
N/S	865250	SCREW M5X65 ZP HEX WASHER
N/S	833880	CABLE ASSY 65' 6 PIN
N/S	864402	CABLE ASSY 131' 6 PIN
N/S	500363	BRACKET MOUNT WALL MAGIQTOUCH
N/S	861265	CABLE 15' RECEIVER RF 6 PIN
N/S	593104	ADAPTER DRAIN 32-20 MM
N/S	861593	NUT DRAIN ADAPTOR
N/S	535401	NUT 1.5 BSP

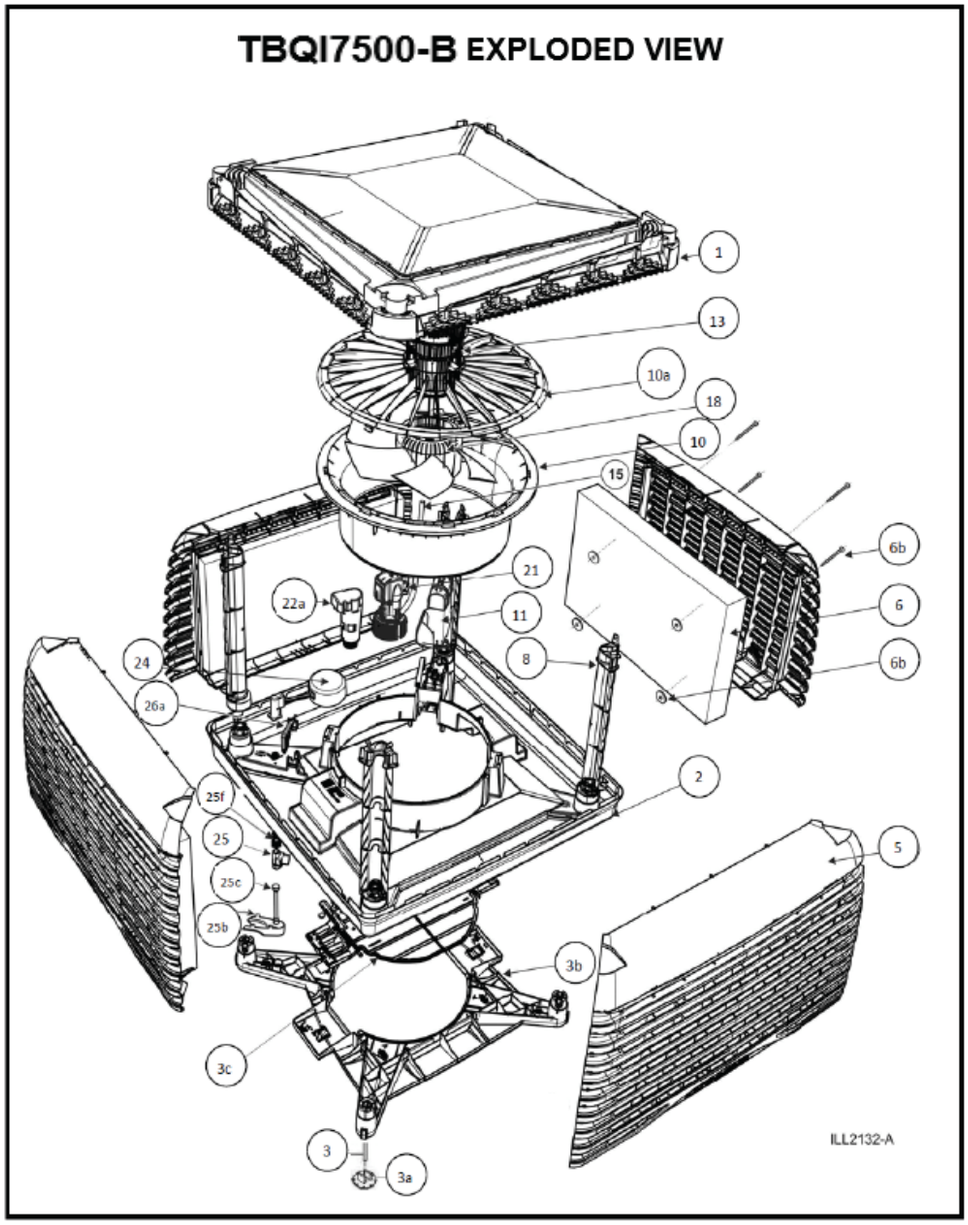

TBQI 7500 PARTS LIST CONT.		
DIA#	MFG#	DESCRIPTION
N/S	804811	O'RING BLEED OF FUNNEL LARGE
N/S	800059	O'RING FLOAT VALVE (NIPPLE)
N/S	800103	O'RING FLOAT VALVE (VALVE STEM)
N/S	816074	KIT FITTING SOLENOID
N/S	813264	COPPER TUBE STRAIGHT
N/S	094298RP	MAGIQTOUCH WIRED WALL CONTROL
N/S	118550RP	MAGIQTOUCH WIRELESS WALL CONTROL
N/S	903316	RECEIVER ASSY RF 915MHZ
N/S	094274	MAGIQTOUCH LINK MODULE
N/S	094328	MAGIQTOUCH AIR SENSOR INTERNAL
N/S	117324	MAGIQTOUCH AIR SENSOR EXTERNAL
N/S	122526	KIT WEATHERSEAL L/R AXIAL
N/S	820934	MAIN POWER LEAD STREIGHT
N/S	661421	BRASS CONNECTOR 1/2" BSP - 1/4" BSP
N/S	904171	KIT PACKOUT TBQI
N/S	825380	WASHER TAP 18.5*3 BLACK

TBSI 580 VAR-SPEED AXIAL FAN

Convair Model	MFG#	Industry Standard CFM	Volts	AMPS	Motor HP	Weight LB
TBSI580	226156	10000	230	10	950W	154

TBSI580 MODEL COOLER COME EQUIPPED WITH THE FOLLOWING

- VARIABLE SPPED ICPMD JUNCION BOX
- DIRECT DRIVE MOTOR / FAN
- TORNADO PUMP 230V (UL)
- FLOAT VALVE
- CHILLCEL PADS (4)
- ROOF JACK TRANSITION ASSEMBLY 21 5/8 X 21 5/8 INCHES
- INSTALLATION KIT (MAGIQTOUCH WIRED WALL CONTROL, WATER MANAGER, AUTO DRAIN, COMMUNICATION CABLE AND PLUMBING FITTINGS)

OPTIONS

	116808	KIT BMS INDUSTRIAL MS1
	114750	KIT BMS MASTER INDUSTRIAL M1
	094274	MAGIQTOUCH MULTI COOLER LINK MODULE
	094328	MAGIQTOUCH AIR SENSOR INTERNAL
	117324	MAGIQTOUCH AIR SENSOR EXTERNAL
	113098	LEG SUPPORT KIT WITH FOOT (SET OF 4)
	833880	CABLE ASSY 65' 6 PIN
	864402	CABLE ASSY 131' 6 PIN
	861265	10' COMMUNICATION CABLE / LINK MODULE
	862873	5' TEST CABLE / LINK MODULE
	118574	MAGIQTOUCH RF WIRELEES WALL CONTROL KIT

THE MOST COMMON REPLACEMENT PARTS

	117423	ICPMD J-BOX VARIABLE SPEED
	116938 RP	MOTOR VARIABLE SPEED 950W
	116006	TORNADO PUMP 230V (UL)
	116389	AUTO DRAIN 12V
	901497	VERTICAL FLOAT VALVE
	865607	SOLENOID VALVE 12V
	865621	WATER PROBE 2 PIN
	116242	CHILLCEL PAD 20.75 X 33.5 X 4.75 (SET OF 4)
	094298 RP	MAGIQTOUCH WIRED WALL CONTROL HANDSET
	111650	WEATHERSEAL TRANSITION ASSEMBLY WITH FLAPS

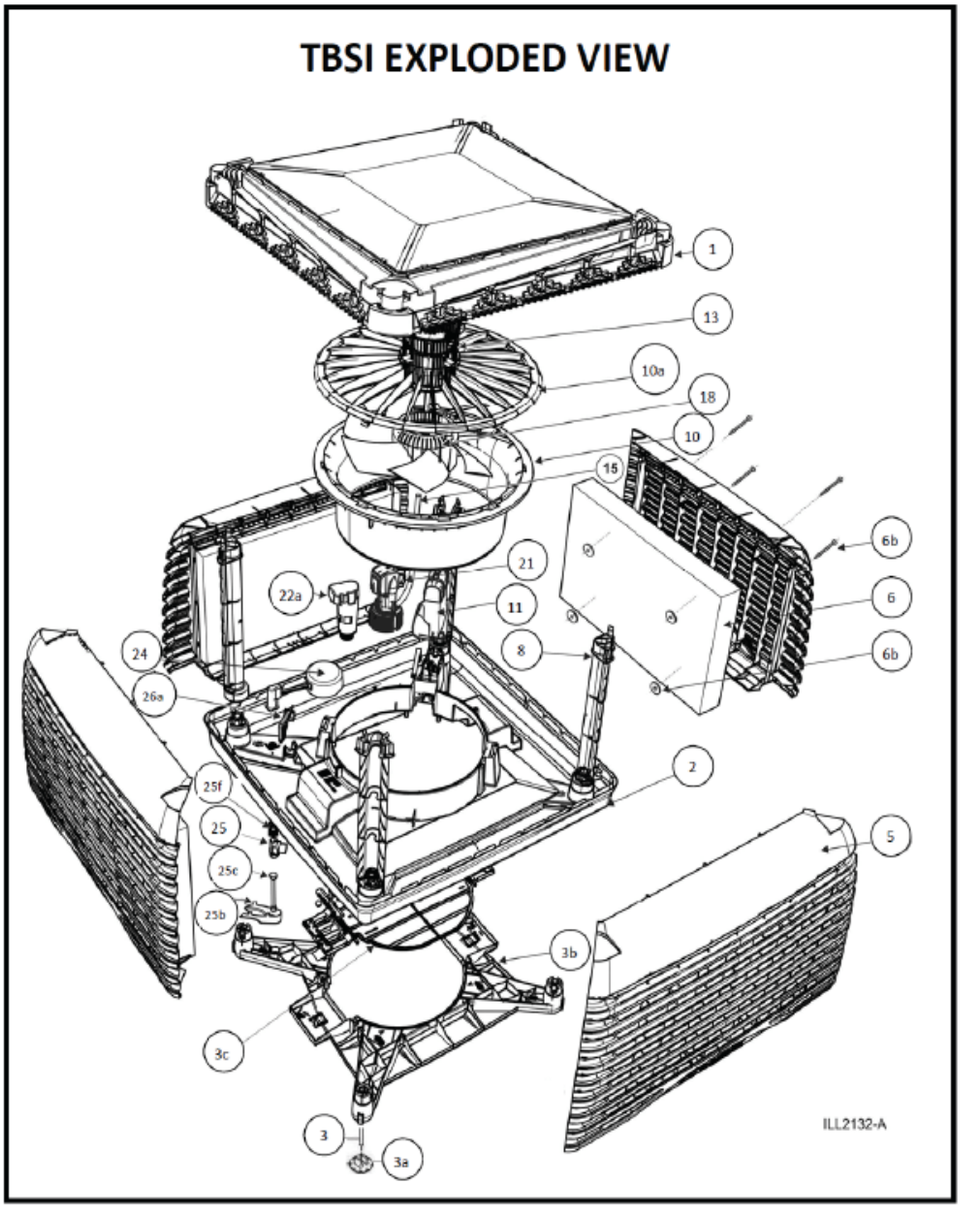

TBSI 580 PARTS LIST		
DIA#	**MFG#**	**DESCRIPTION**
1	560014	LID AND SPREADER ASSEMBLY GREY
2	560052RP	TANK LCQ GREY + TAPER STRAINER
3	113098	LEG SUPPORT KIT WITH FOOT (SET OF 4)
3A	509518	LEG EXTENSION FOOT
3B	111650	WEATHER SEAL TRANSITION WITH FLAPS
3C	111148	WEATHER SEAL FLAPS ONLY (SET OF 2)
5	560595	PAD FRAME LARGE GREY
6	116242	CHILLCEL PAD 33.5 X 20.75 X 4.75
6B	561067	PAD RETAINING PIN
6B	401966	PAD RETAINING DISC
8	560236	PILLAR CORNER POST LARGE
10	113085	FAN INLET RING
10A	560946	MOTOR MOUNT SUPERSTEALTH
11	117423	ICPMD J-BOX VARIABLE SPEED
13	116938RP	MOTOR VARIABLE SPEED 950W
18	560922	FAN AXIAL
21	116006	TORNADO PUMP 230V (UL)
22	116389	AUTO DRAIN 12V
24	901497	VERTICAL FLOAT VALVE
25	865607	SOLENOID VALVE 12V
25C	850764	FLEXIBLE HOSE AND WASHER ASSY
25F	902830RP	TUBE EXTENSION ASSY , O-RING & WASHER
26A	865621	WATER PROBE 2 PIN
N/S	094298RP	MAGIQTOUCH WIRED WALL CONTROL
N/S	820934	MAIN POWER LEAD STREIGHT
N/S	500363	BRACKET MOUNT WALL CTRL MAGIQTOUCH
N/S	560182	COLLET FOR MOTOR SHAFT
N/S	861609	GRUB SCREW
N/S	594910	DRAIN VALVE RUBBER SEAL
N/S	593104	ADAPTER DRAIN 32-20 MM
N/S	861593	NUT DRAIN ADAPTOR 1.5 BSP
N/S	804811	O-RING BS 830 48.9ID

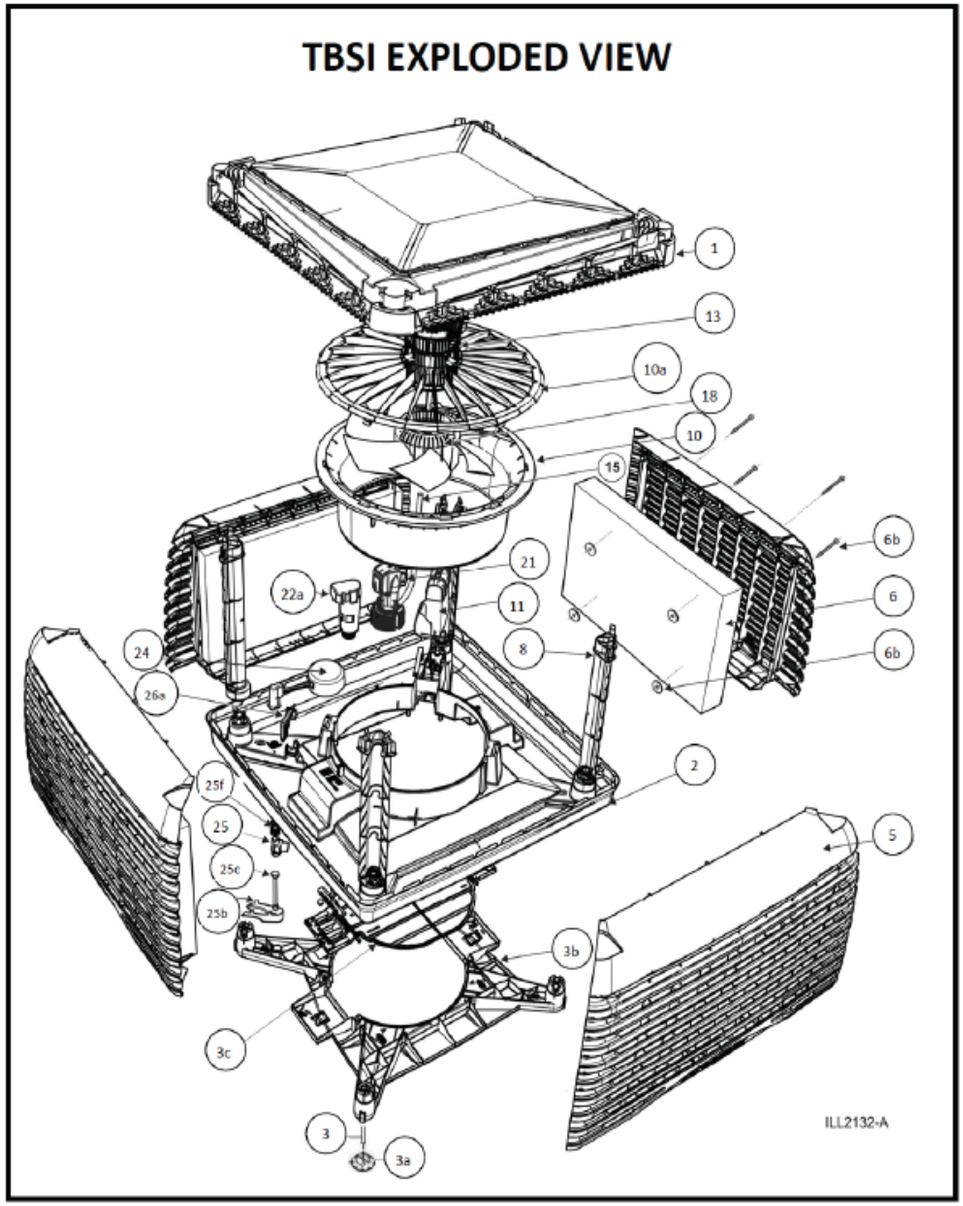

TBSI 580 PARTS LIST CONT.		
DIA#	MFG#	DESCRIPTION
N/S	661421	BRASS CONNECTOR 1/2" BSP - 1/4" BSP
N/S	865614	LEAD ASSY 2C SOLENOID
N/S	552019	COVER SOLENOID
N/S	816074	KIT FITTING SOLENOID
N/S	813264	COPPER TUBE ASSY SOLENOID
N/S	500363	BRACKET MOUNT WALL MAGIQTOUCH
N/S	116808	KIT BMS INDUSTRIAL MS1
N/S	114750	KIT BMS MASTER INDUSTRIAL M1
N/S	094274	MAGIQTOUCH LINK MODULE
N/S	094328	MAGIQTOUCH AIR SENSOR INTERNAL
N/S	117324	MAGIQTOUCH AIR SENSOR EXTERNAL
N/S	833880	CABLE ASSY 65' 6 PIN
N/S	864402	CABLE ASSY 131' 6 PIN
N/S	861265	CABLE 15' RECEIVER RF 6 PIN
N/S	862873	5' TEST CABLE / LINK MODULE
N/S	118574	MAGIQTOUCH RF WIRELESS CTRL KIT
N/S	118550RP	MAGIQTOUCH WIRELESS WALL CONTROL
N/S	903316	RECEIVER ASSY RF 915MHZ
N/S	904139	KIT PACKOUT TBSI
N/S	825380	WASHER TAP 18.5*3 BLACK

TBA 450 VAR-SPEED AXIAL FAN

(DISCONTINUED)

Convair Model	MFG#	Industry Standard CFM	Volts	AMPS	Motor HP	Weight LB
TBA450	224091	10000	230	10	550W	145

TBA450 MODEL COOLER COME EQUIPPED WITH THE FOLLOWING

- VARIABLE SPPED CPMD JUNCION BOX
- DIRECT DRIVE MOTOR / FAN
- TORNADO PUMP 230V
- FLOAT VALVE
- CHILLCEL PADS (4)
- ROOF JACK TRANSITION ASSEMBLY 21 5/8 X 21 5/8 INCHES
- INSTALLATION KIT (TBA SENSOR TOUCH WIRED WALL CONTROL WITH LEAD, WATER MANAGER, AUTO DRAIN, AND PLUMBING FITTINGS)

OPTIONS

	111070	SMART HUB (65' CABLE INCLUDED) LINKS UP TO 4 COOLERS WITH SINGLE SMART HUB OR UP TO 41 COOLERS WITH 10 SMART HUBS
	114095	INDUSTRIAL WALL CONTROL KIT (65' CABLE, 131' CABLE AND REMOTE SENSOR INCLUDED)
	832777	65' CABLE ASSEMBLY
	833897	131' CABLE ASSEMBLY
	834238	197' CABLE ASSEMBLY
	833934	262' CABLE ASSEMBLY

THE MOST COMMON REPLACEMENT PARTS

	114880	CPMD J-BOX VARIABLE SPEED
	095660	MOTOR VARIABLE SPEED 550W
	095905	TORNADO PUMP 230V
	105345	AUTO DRAIN 24V
	901497	VERTICAL FLOAT VALVE
	834320	SOLENOID VALVE 24V
	833811	WATER PROBE
	114606	CHILLCEL PAD 33.5 X 20.75 X 3.5 (SET OF 4)
	117782 RP	TBA SENSOR TOUCH WIRED WALL CONTROL
	560182	COLLET FOR MOTOR SHAFT

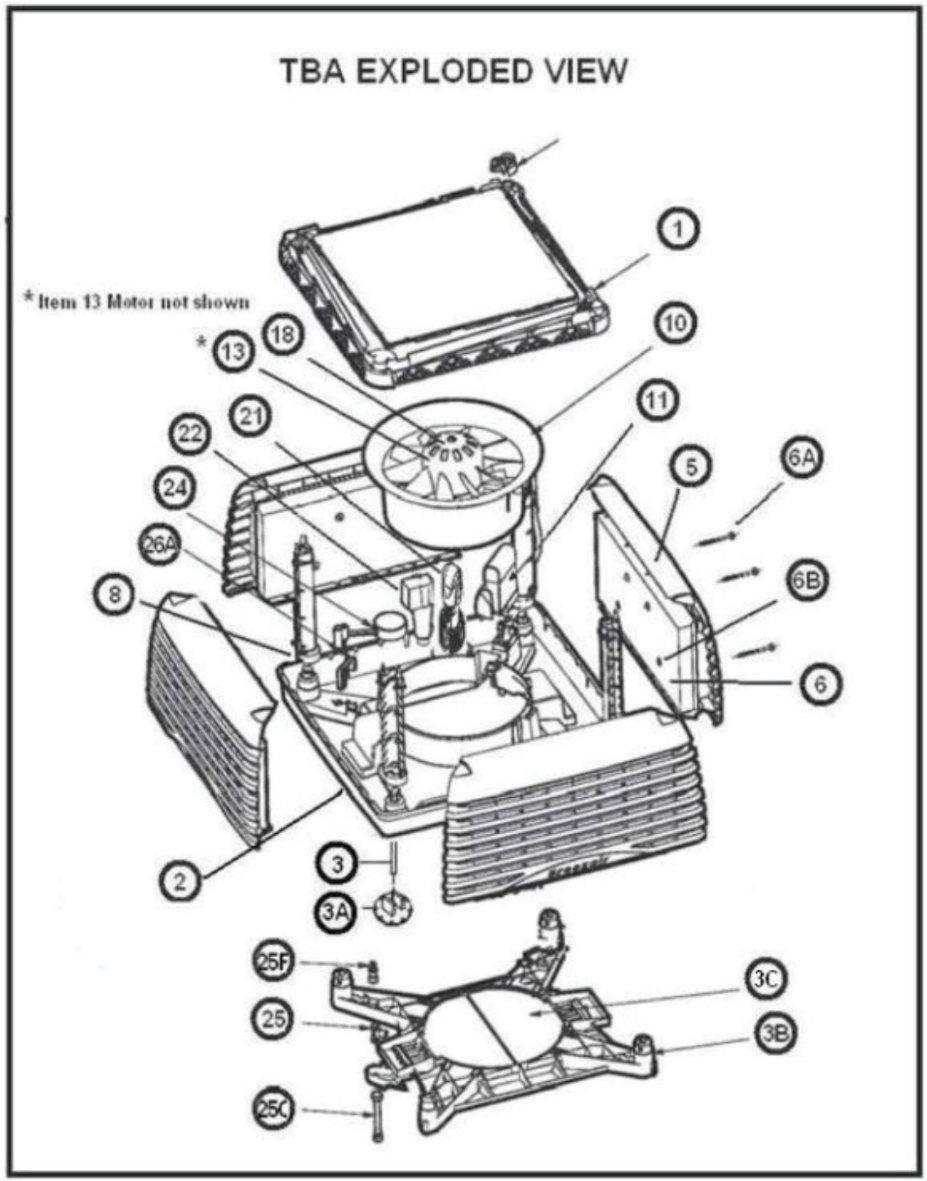

TBA 450 PARTS LIST		
DIA#	MFG#	DESCRIPTION
1	560014	LID AND SPREADER ASSEMBLY GREY
2	560052RP	TANK LCQ GREY + TAPER STRAINER
3	113098	LEG SUPPORT KIT WITH FOOT (SET OF 4)
3A	509518	LEG EXTENSION FOOT
3B	111650	WEATHER SEAL TRANSITION WITH FLAPS
3C	111148	WEATHER SEAL FLAPS ONLY (SET OF 2)
5	560595	PAD FRAME LARGE GREY
6	114606	CHILLCEL PAD 33.5 X 20.75 X 3.5
6A	561067	PAD RETAINING PIN
6B	401966	PAD RETAINING DISC
8	560236	PILLAR CORNER POST LARGE
10	560199	FAN INLET RING TBA
11	114880	CPMD J-BOX VARIABLE SPEED
13	095660	MOTOR VARIABLE SPEED 550W
18	560168	FAN AXIAL
21	095905	TORNADO PUMP 230V
22	105345	AUTO DRAIN 24V
24	901497	VERTICAL FLOAT VALVE
25	834320	SOLENOID VALVE 24V
25C	850764	FLEXIBLE HOSE AND WASHER ASSY
25F	902830RP	TUBE EXTENSION ASSY , O-RING & WASHER
25A	833811	WATER PROBE
N/S	117782RP	TBA SENSOR TOUCH WALL CONTROL
N/S	560182	COLLET FOR MOTOR SHAFT
N/S	584331	PLATE MOUNT WALL FOR 117782RP
N/S	832777	CABLE 65' SENSOR TOUCH WALL CONTROL
N/S	833897	CABLE 131' SENSOR TOUCH WALL CONTROL
N/S	834238	CABLE 197' SENSOR TOUCH WALL CONTROL
N/S	833934	CABLE 262' SENSOR TOUCH WALL CONTROL
N/S	111070	SMART HUB
N/S	114095	IWC KIT
N/S	902999	KIT PACKOUT TBA

TBS 500 VAR-SPEED AXIAL FAN

(DISCONTINUED)

Convair Model	MFG#	Industry Standard CFM	Volts	AMPS	Motor HP	Weight LB
TBS500	224114	10000	230	10	750W	145

TBS500 MODEL COOLER COME EQUIPPED WITH THE FOLLOWING

- VARIABLE SPPED CPMD JUNCION BOX
- DIRECT DRIVE MOTOR / FAN
- TORNADO PUMP 230V (UL)
- FLOAT VALVE
- CHILLCEL PADS (4)
- ROOF JACK TRANSITION ASSEMBLY 21 5/8 X 21 5/8 INCHES
- INSTALLATION KIT (MAGIQTOUCH WIRED WALL CONTROL WITH LEAD, WATER MANAGER, AUTO DRAIN, AND PLUMBING FITTINGS)

OPTIONS

	094274	MAGIQTOUCH MULTI COOLER LINK MODULE
	094328	MAGIQTOUCH AIR SENSOR INTERNAL
	113098	LEG SUPPORT KIT WITH FOOT (SET OF 4)
	833880	CABLE ASSY 65' 6 PIN
	864402	CABLE ASSY 131' 6 PIN
	861265	10' COMMUNICATION CABLE / LINK MODULE

THE MOST COMMON REPLACEMENT PARTS

	116990	CPMD J-BOX VARIABLE SPEED
	091419	MOTOR VARIABLE SPEED 750W
	116006	TORNADO PUMP 230V (UL)
	105345	AUTO DRAIN 24V
	901497	VERTICAL FLOAT VALVE
	834320	SOLENOID VALVE 24V
	833811	WATER PROBE
	116242	CHILLCEL PAD 20.75 X 33.5 X 4.75 (SET OF 4)
	094298 RP	MAGIQTOUCH WIRED WALL CONTROL HANDSET
	560182	COLLET FOR MOTOR SHAFT

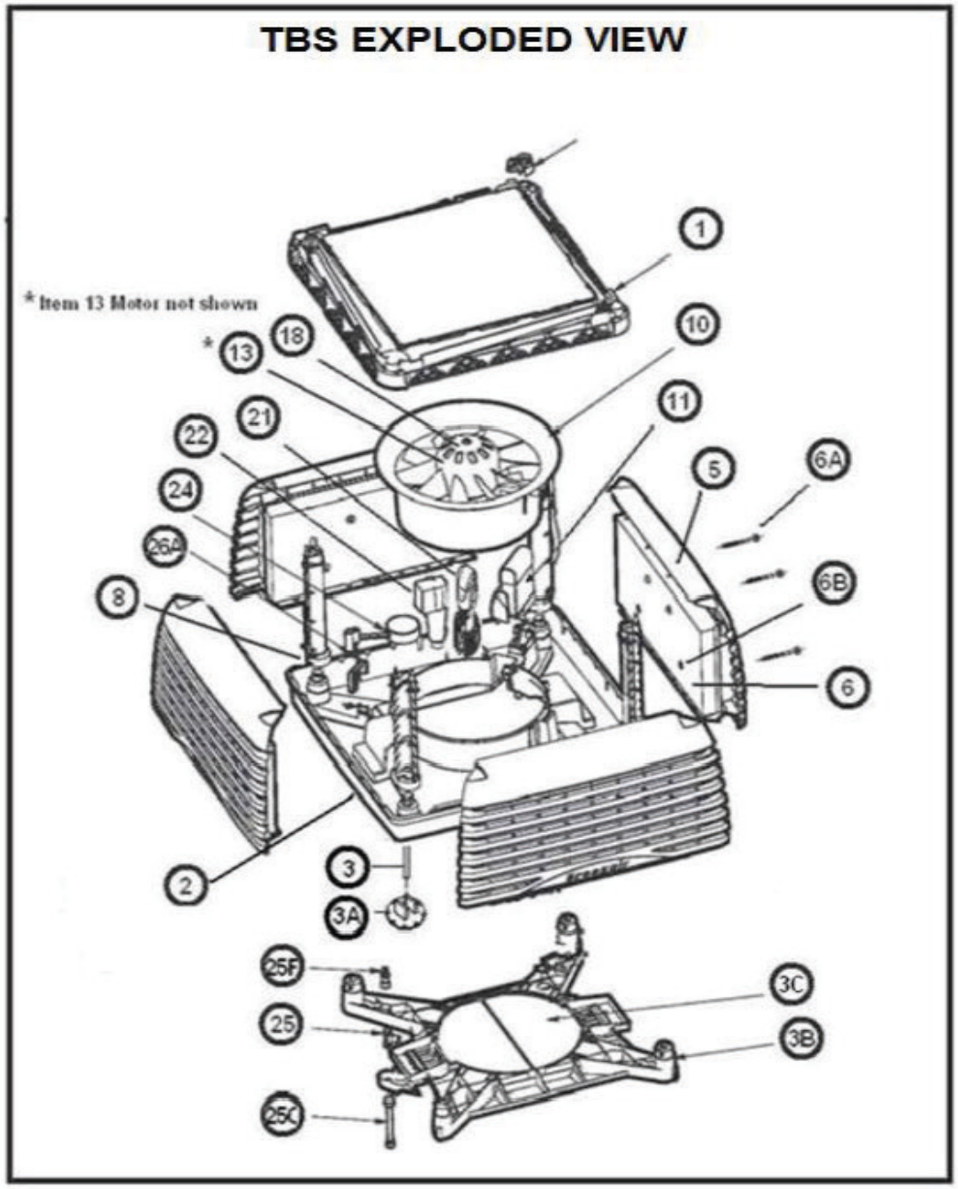

TBS 500 PARTS LIST		
DIA#	MFG#	DESCRIPTION
1	560014	LID AND SPREADER ASSEMBLY GREY
2	560052RP	TANK LCQ GREY + TAPER STRAINER
3	113098	LEG SUPPORT KIT WITH FOOT (SET OF 4)
3A	509518	LEG EXTENSION FOOT
3B	111650	WEATHER SEAL TRANSITION WITH FLAPS
3C	111148	WEATHER SEAL FLAPS ONLY (SET OF 2)
5	560595	PAD FRAME LARGE GREY
6	116242	CHILLCEL PAD 33.5 X 20.75 X 4.75
6A	561067	PAD RETAINING PIN
6B	401966	PAD RETAINING DISC
8	560236	PILLAR CORNER POST LARGE
10	560199	FAN INLET RING
11	116990	CPMD J-BOX VARIABLE SPEED
13	091419	MOTOR VARIABLE SPEED 750W
18	560175	FAN AXIAL
21	116006	TORNADO PUMP 230V UL
22	105345	AUTO DRAIN 24V
24	901497	VERTICAL FLOAT VALVE
25	834320	SOLENOID VALVE 24V
25C	850764	FLEXIBLE HOSE AND WASHER ASSY
25F	902830RP	TUBE EXTENSION ASSY , O-RING & WASHER
26A	833811	WATER PROBE
N/S	560182	COLLET FOR MOTOR SHAFT
N/S	094298RP	MAGIQTOUCH WIRED WALL CONTROL
N/S	820934	MAIN POWER LEAD STREIGHT
N/S	500363	BRACKET MOUNT WALL CTRL MAGIQTOUCH
N/S	661421	BRASS CONNECTOR 1/2" BSP - 1/4" BSP
N/S	861609	GRUB SCREW
N/S	594910	DRAIN VALVE RUBBER SEAL
N/S	593104	ADAPTER DRAIN 32-20 MM
N/S	861593	NUT DRAIN ADAPTOR 1.5 BSP
N/S	804811	O-RING BS 830 48.9ID

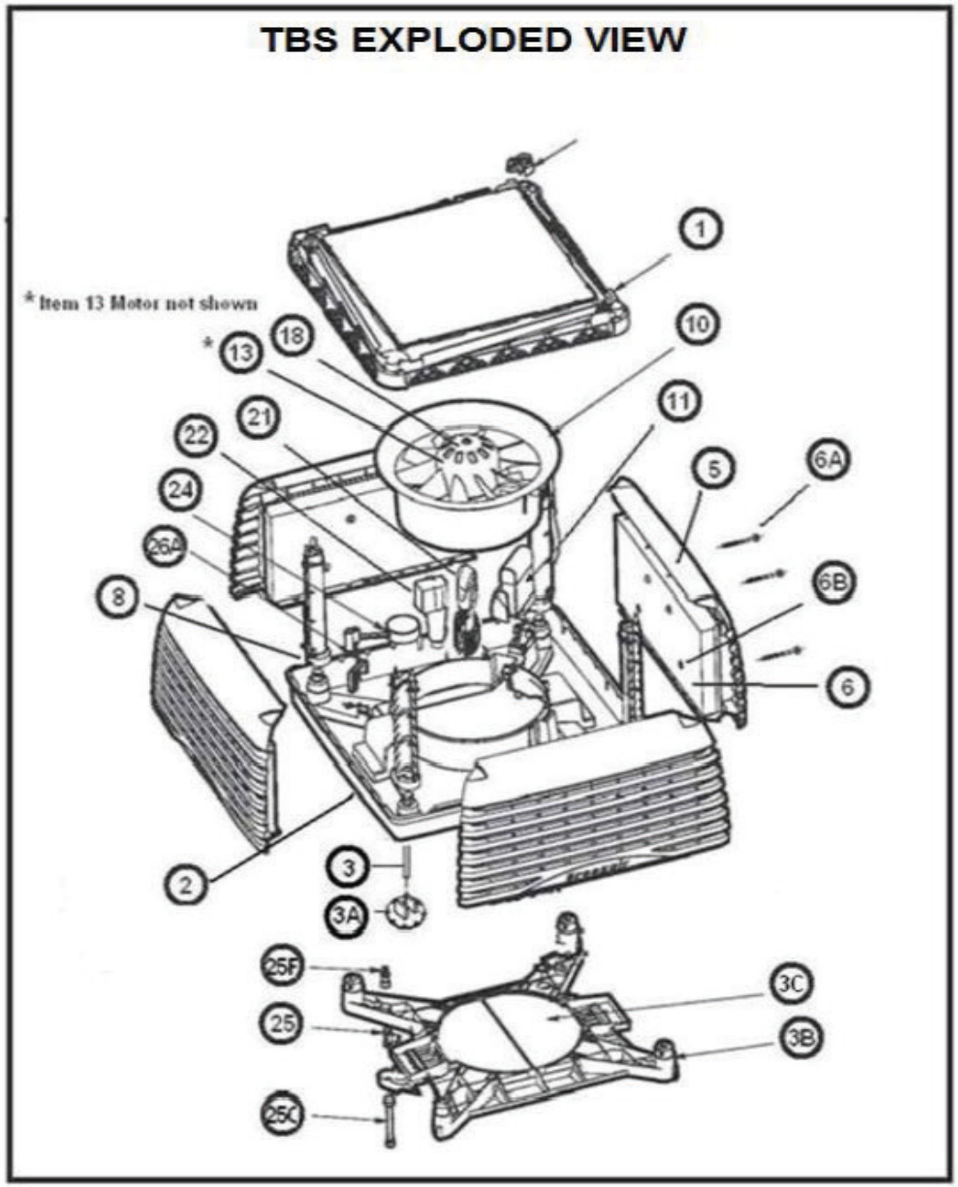

TBS 500 PARTS LIST CONT.		
DIA#	MFG#	DESCRIPTION
N/S	865614	LEAD ASSY 2C SOLENOID
N/S	552019	COVER SOLENOID
N/S	816074	KIT FITTING SOLENOID
N/S	813264	COPPER TUBE ASSY SOLENOID
N/S	500363	BRACKET MOUNT WALL MAGIQTOUCH
N/S	094274	MAGIQTOUCH LINK MODULE
N/S	094328	MAGIQTOUCH AIR SENSOR INTERNAL
N/S	833880	CABLE ASSY 65' 6 PIN
N/S	864402	CABLE ASSY 131' 6 PIN
N/S	903699	KIT PACKOUT TBS

ENVIROMAGIC VAR-SPEED AXIAL

(DISCONTINUED)

Convair Model	MFG#	Industry Standard CFM	Volts	AMPS	Motor HP	Weight LB
ENV	086910	28000	440	19.5	1500W	569

ENVIROMAGIC MODEL COOLER COME EQUIPPED WITH THE FOLLOWING

- DIGITAL SMARTBOX CONTROL MODULE
- DIRECT DRIVE MOTOR / FAN ASSEMBLIES (3)
- HIGH VOLUME UL RATED CIRCULATION PUMP
- BUILDING MANAGEMENT SYSTEM (BMS) INTERFACE
- CHILLCEL PADS (9)
- ENVIROMAGIC SENSOR TOUCH WIRED WALL CONTROL WITH LEAD, WATER MANAGER, AUTO DRAIN AND PLUMBING FITTINGS.

OPTIONS

	833897	131' CABLE ASSEMBLY

THE MOST COMMON REPLACEMENT PARTS

	670645	COOLER CONTROL BOARD
	863351	MOTOR VARIABLE SPEED 1500W
	116754	HIGH VOLUME UL RATED CIRCULATION PUMP
	114293	AUTO DRAIN 12V
	560168	HIGH PERFORMANCE AXIAL FAN
	825250	SOLENOID VALVE 12V
	833835	WATER PROBE 3 PIN
	119991	CHILLCEL PAD
	113210	ENVIROMAGIC SENSOR TOUCH WIRED WALL CONTROL
	560182	COLLET FOR MOTOR SHAFT

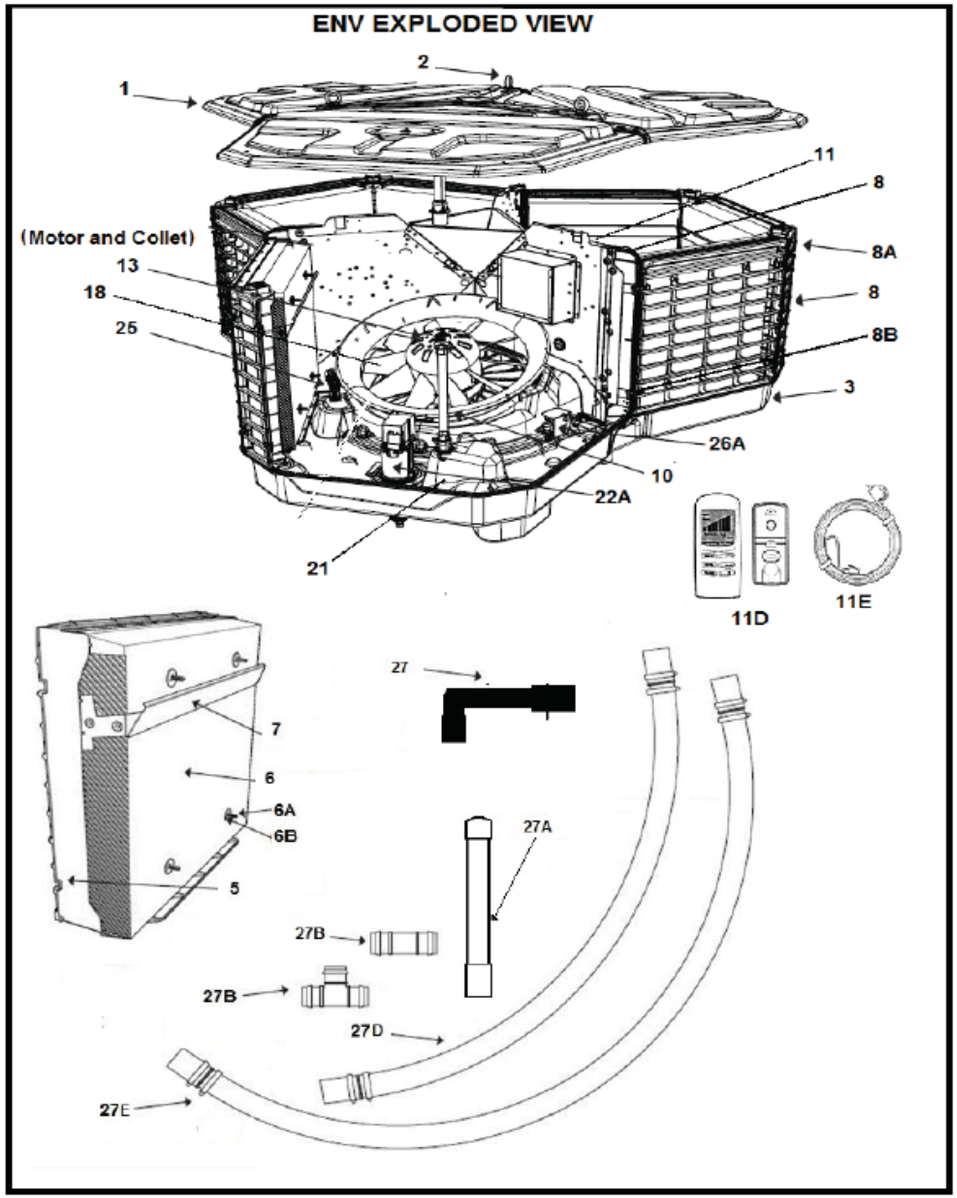

ENVIROMAGIC PARTS LIST		
DIA#	MFG#	DESCRIPTION
1	565118	LID AND SPREADER ASSEMBLY GREY
2	861081	EYE BOLTS AND LIFTING LUGS
3	565316	TANK ASSEMBLY
N/S	116594	DUCT ATTACHMENT CHANNELS
N/S	649955	MOUNT PLATE
5	566009	PAD FRAME ENV
6	119991	CHILLCEL PAD
6A	561067	PAD RETAINING PIN
6B	401966	PAD RETAINING DISC
7	650036	WATER DEFLECTOR
8	565064	CORNER PILLAR EXTERNAL
8	565057	CORNER PILLAR INTERNAL
8A	541679	CORNER PAD CLIPS
8B	561059	CORNER CLIP INTERNAL
10	560199	FAN INLET RING
11	114965	CONTROL ASSEMBLY
11D	584331	WALL MOUNT PLATE FOR 113210
11D	113210	ENV SENSOR TOUCH WALL CONTROL
11E	834245	LEAD ASSY 65' 4 PIN FOR ENV ONLY
13	863351	MOTOR VARIABLE SPEED 1500W
18	560168	FAN AXIAL
21	116754	CIRCULATION PUMP (NIDEC)
22A	114293	AUTO DRAIN 12V
25	825250	SOLENOID VALVE 12V
26A	833835	WATER PROBE
27	860442	ELBOW PUM TO SPREADER
27A	TBD	PVC PIPE ASSEMBLY
27B	862774	JOINED BARBED
27C	861180	TEE PIECE FOR TUBING
27D	116570	TUBE TANK 2 TO TEE
27E	116587	TUBE TANK 3 TO TEE
N/S	670645	COOLER CONTROL BOARD

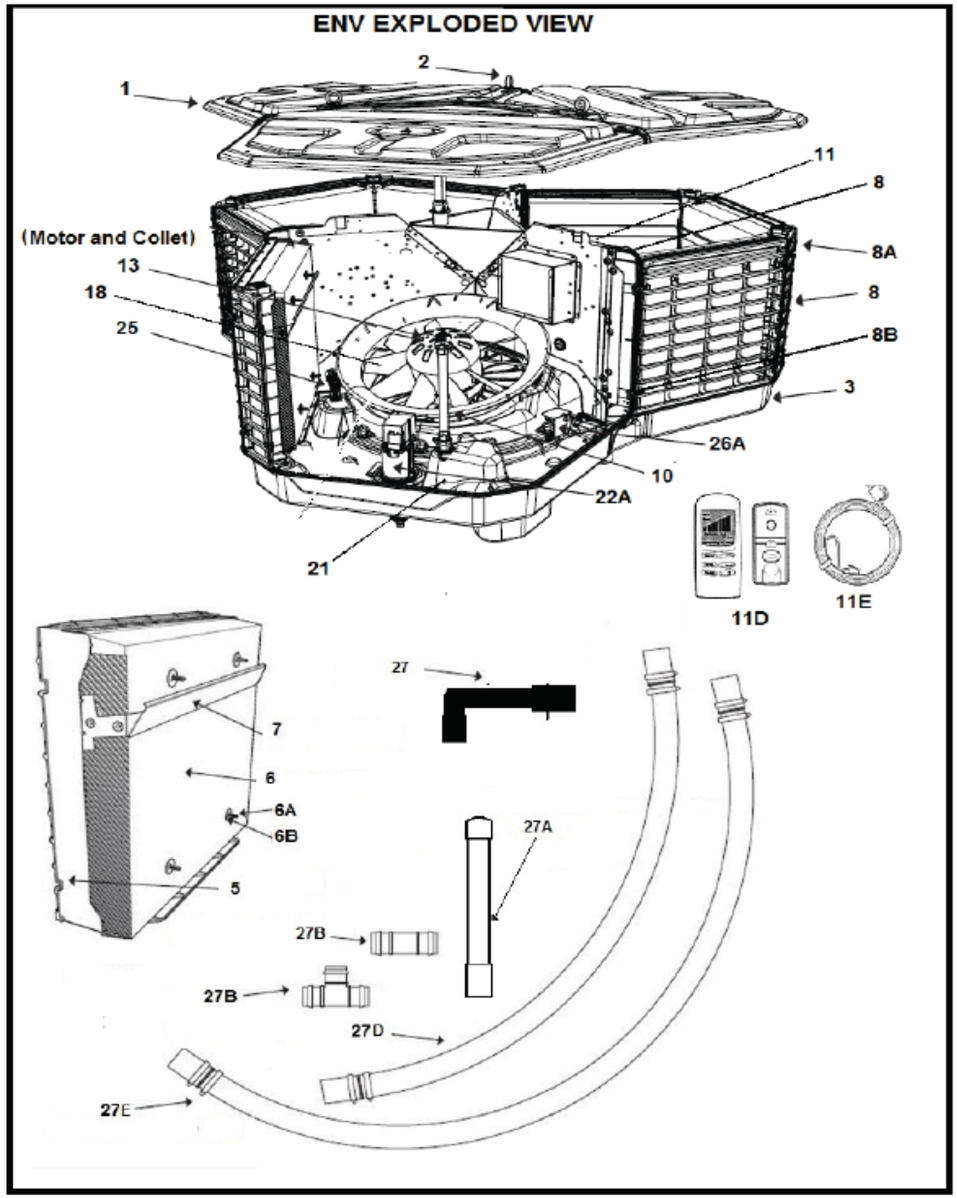

ENVIROMAGIC PARTS LIST CONT.		
DIA#	MFG#	DESCRIPTION
N/S	584331	PLATE MOUNT WALL FOR 113210
N/S	670768	BLDG MANAGEMENT SYSTEM INTERFACE
N/S	114545	SMART CARD
N/S	862507	CIRCUIT BREAKER
N/S	832777	CABLE 65' SENSOR TOUCH WALL CONTROL
N/S	833897	CABLE 131' SENSOR TOUCH WALL CONTROL
N/S	560182	COLLET FOR MOTOR SHAFT
N/S	535401	NUT 1.5 BSP

ENV 600 VAR-SPEED AXIAL FAN

(DISCONTINUED)

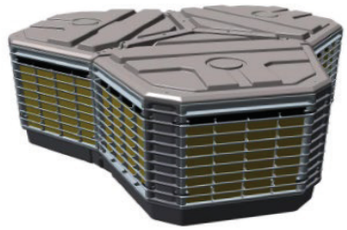

Convair Model	MFG#	Industry Standard CFM	Volts	AMPS	Motor HP	Weight LB
ENV600	086941	15000	200-240	9.6	430W	584

ENV600 MODEL COOLER COME EQUIPPED WITH THE FOLLOWING

- DIGITAL SMARTBOX CONTROL MODULE
- INVERTER DRIVE MOTOR / FAN ASSEMBLIES (3)
- TORNADO WATER PUMP (3)
- BUILDING MANAGEMENT SYSTEM (BMS) INTERFACE
- CHILLCEL PADS (9)
- MAGIQTOUCH WIRED TOUCH SCREEN WALL CONTROL WITH COMMUNICATION LEAD, WATER MANAGER, AUTO DRAIN AND PLUMBING FITTINGS.

OPTIONS

	116808	KIT BMS INDUSTRIAL MS1
	114750	KIT BMS MASTER INDUSTRIAL M1
	864402	CABLE ASSY 131' 6 PIN

THE MOST COMMON REPLACEMENT PARTS

	671190 RP	COOLER CONTROL BOARD (PCBA)
	865090 RP	MOTOR VARIABLE SPEED 430W
	116679	TORNADO PUMP 230V
	116723	AUTO DRAIN 12V
	560922	FAN SUPERSTEALTH AXIAL
	865607	SOLENOID VALVE 12V
	865409	WATER PROBE 3 PIN
	119995	CHILLCEL PAD (9 PER COOLER) 29.5 X 23.5 X 4.5
	094298 RP	MAGIQTOUCH WIRED WALL CONTROL HANDSET
	903767	VERTICAL FLOAT VALVE

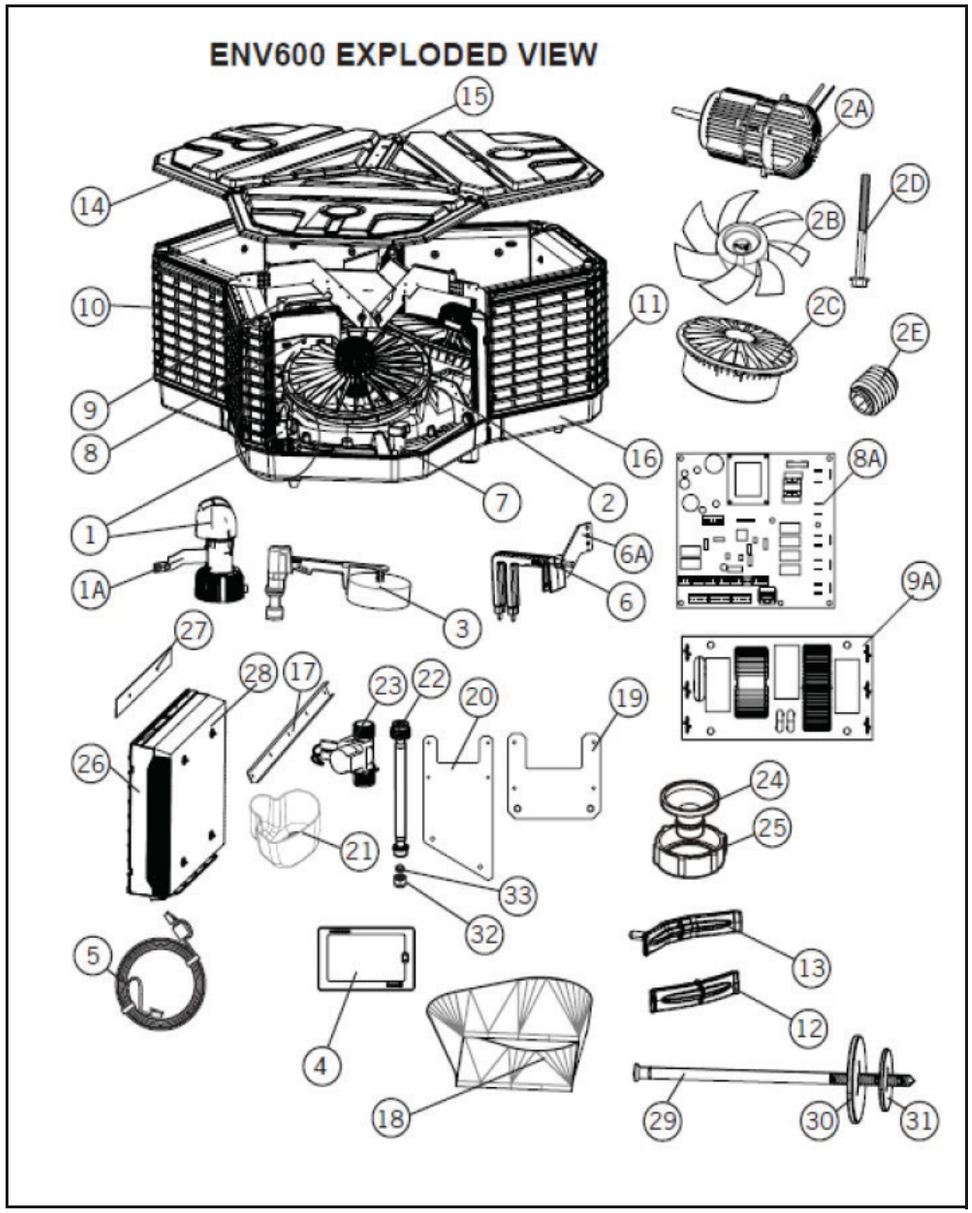

ENV 600 PARTS LIST		
DIA#	**MFG#**	**DESCRIPTION**
1	116679	TORNADO WATER PUMP 230V
1A	649996	PUMP BRACKET
2	113085	VENTURI MOTOR MOUNT ASSEMBLY
2A	865090RP	MOTOR VARIABLE SPEED 430W
2B	560922	FAN SUPERSTEALTH AXIAL
2C	113085	VENTURI MOTOR MOUNT ASSEMBLY
2D	865250	MOTOR MOUNT SCREWS
2E	861609	FAN GRUB SCREW
3	903767	VALVE VERTICAL ASSY ENV + FLOAT
4	094298RP	MAGIQTOUCH WIRED WALL CONTROL
5	833880	CABLE ASSY 65' 6 PIN
6	864509	PROBE WATER PIN
6A	650000	WATER PROBE BRACKET
7	116723	AUTO DRAIN 12V
8	116839RP	CONTROL ASSEMBLY
8A	671190RP	CONTROL BOX PCBA
9	649871	EMC FILTER BOX ASSY
9A	671284	EMC FILTER PCBA
10	565057	CORNER PILLAR INTERNAL
11	565064	CORNER PILLAR EXTERNAL
12	541679	CORNER PAD CLIP
13	561059	CLIP INNER PAD FRAME
14	565119	LID ROUTED GREY
15	865713	BRACKET LIFTING
16	565317	TANK ROUTED GREY
17	116594	DUCT ATTACHMENT CHANNELS
18	861074	FLEXIBLE TRANSITION
19	649956	PLATE MOUNT COOLER FRAME REAR
20	649957	PLATE MOUNT COOLER FRAME RH/LH
21	552026	SOLENOID COVER
22	850764	FLEXIBLE HOSE AND WASHER ASSY
23	865607	SOLENOID VALVE 12V

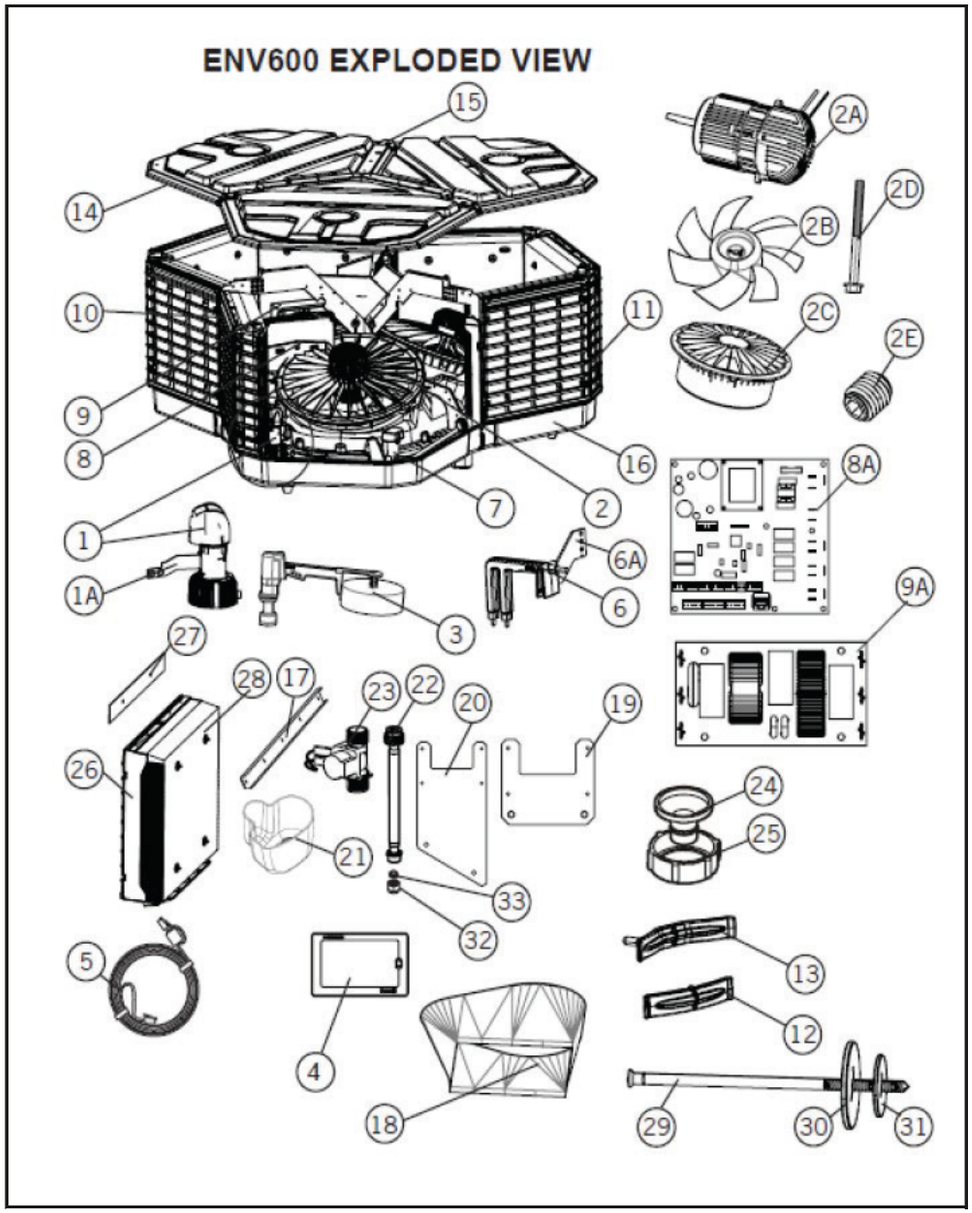

ENV 600 PARTS LIST CONT.		
DIA#	MFG#	DESCRIPTION
24	593104	ADAPTER DRAIN 32-20 MM
25	861593	NUT DRAIN ADAPTOR
26	566009	PAD FRAME
27	649344	PAD BLOCKER
28	119995	CHILLCEL PAD
29	561067	PAD RETAINING PIN
30	824659	PAD RETAINING WASHER LARGE
31	401966	PAD RETAINING WASHER
32 / 33	824949	1/2" BSP NUT & OLIVE WATER INLET
N/S	500363	BRACKET MOUNT WALL MAGIQTOUCH
N/S	864402	CABLE ASSY 131' 6 PIN
N/S	116808	KIT BMS INDUSTRIAL MS1
N/S	114750	KIT BMS MASTER INDUSTRIAL M1
N/S	661421	BRASS CONNECTOR 1/2" BSP - 1/4" BSP
N/S	825380	WASHER TAP 18.5*3 BLACK

ENV 1000 VAR-SPEED AXIAL FAN

(DISCONTINUED)

Convair Model	MFG#	Industry Standard CFM	Volts	AMPS	Motor HP	Weight LB
ENV1000	086972	25000	440-480	15	1500W	695

ENV1000 MODEL COOLER COME EQUIPPED WITH THE FOLLOWING

- DIGITAL SMARTBOX CONTROL MODULE
- INVERTER DRIVE 3 PHASE MOTOR / FAN ASSEMBLIES (3)
- TORNADO WATER PUMP (3)
- BUILDING MANAGEMENT SYSTEM (BMS) INTERFACE
- CHILLCEL PADS (9)
- MAGIQTOUCH WIRED TOUCH SCREEN WALL CONTROL WITH COMMUNICATION LEAD, WATER MANAGER, AUTO DRAIN AND PLUMBING FITTINGS.

OPTIONS

	116808	KIT BMS INDUSTRIAL MS1
	114750	KIT BMS MASTER INDUSTRIAL M1
	864402	CABLE ASSY 131' 6 PIN

THE MOST COMMON REPLACEMENT PARTS

	671191 RP	COOLER CONTROL BOARD (PCBA)
	862175 RP	MOTOR VARIABLE SPEED 1500W
	116679	TORNADO PUMP 230V
	116723	AUTO DRAIN 12V
	560922	FAN SUPERSTEALTH AXIAL
	865607	SOLENOID VALVE 12V
	865409	WATER PROBE 3 PIN
	119994	CHILLCEL PAD (9 PER COOLER) 37.5 X 23.5 X 5
	094298 RP	MAGIQTOUCH WIRED WALL CONTROL HANDSET
	903767	VERTICAL FLOAT VALVE

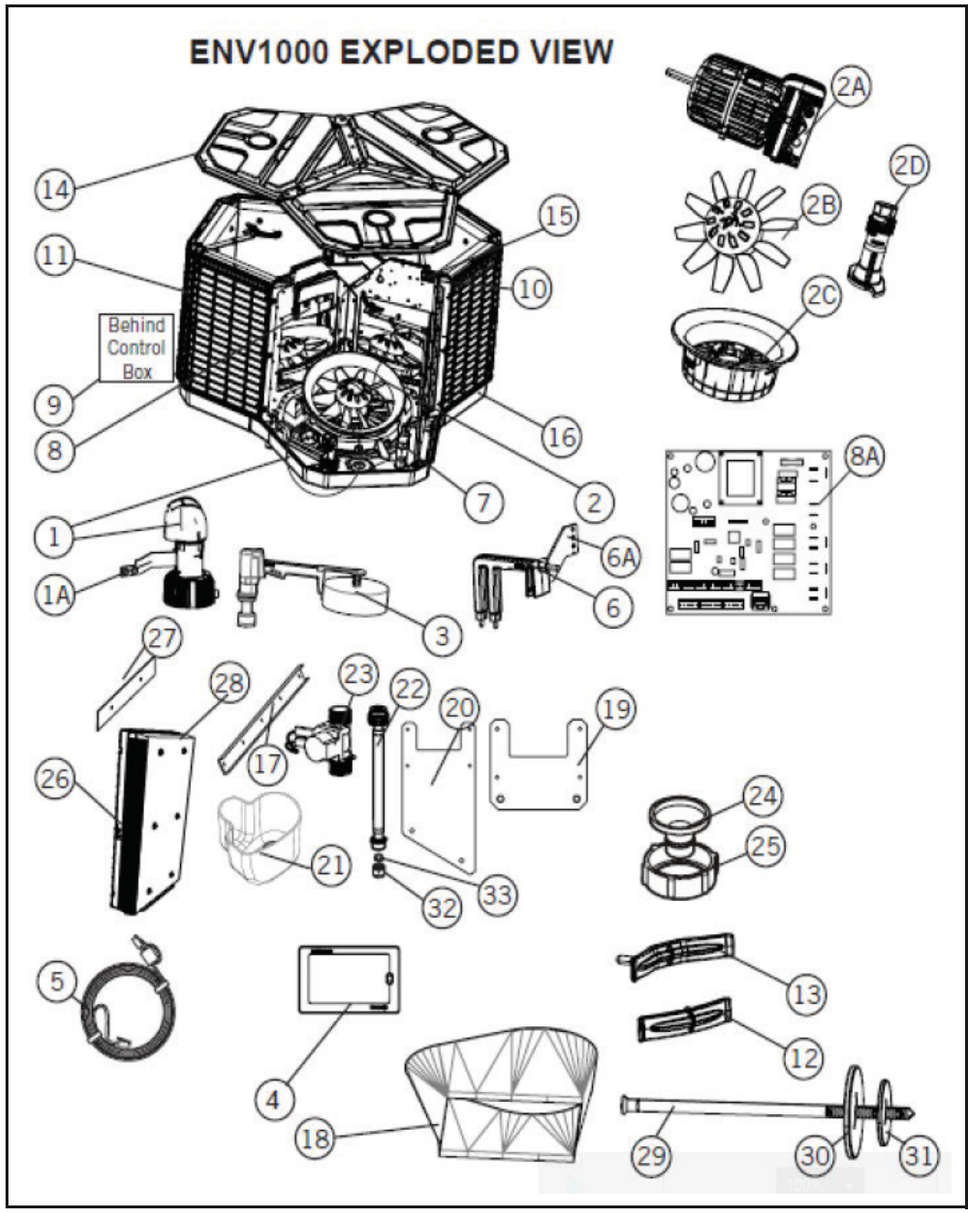

ENV 1000 PARTS LIST		
DIA#	**MFG#**	**DESCRIPTION**
1	116679	TORNADO WATER PUMP 230V
1A	649996	PUMP BRACKET
2	113085	VENTURI MOTOR MOUNT ASSEMBLY
2A	862175RP	MOTOR VARIABLE SPEED 1500W
2B	560168	FAN AXIAL HIGH CAPACITY
2C	560199	VENTURI MOTOR MOUNT ASSY
2D	560182	COLLET FAN
3	903767	VALVE VERTICAL ASSY ENV + FLOAT
4	094298RP	MAGIQTOUCH WIRED WALL CONTROL
5	833880	CABLE ASSY 65' 6 PIN
6	864509	PROBE WATER PIN
6A	650000	WATER PROBE BRACKET
7	116723	AUTO DRAIN 12V
8	116583	CONTROL BOX ASSY
8A	671190RP	CONTROL BOX PCBA
9	649871	EMC FILTER BOX ASSY
10	116617	CORNER PILLAR INTERNAL
11	116600	CORNER PILLAR EXTERNAL
12	541679	CORNER PAD CLIP
13	561059	CLIP INNER PAD FRAME
14	565119	LID ROUTED GREY
15	865713	BRACKET LIFTING
16	565317	TANK ROUTED GREY
17	116594	DUCT ATTACHMENT CHANNELS
18	861074	FLEXIBLE TRANSITION
19	649956	PLATE MOUNT COOLER FRAME REAR
20	649957	PLATE MOUNT COOLER FRAME RH/LH
21	552026	SOLENOID COVER
22	850764	FLEXIBLE HOSE AND WASHER ASSY
23	865607	SOLENOID VALVE 12V
24	593104	ADAPTER DRAIN 32-20 MM
25	861593	NUT DRAIN ADAPTOR

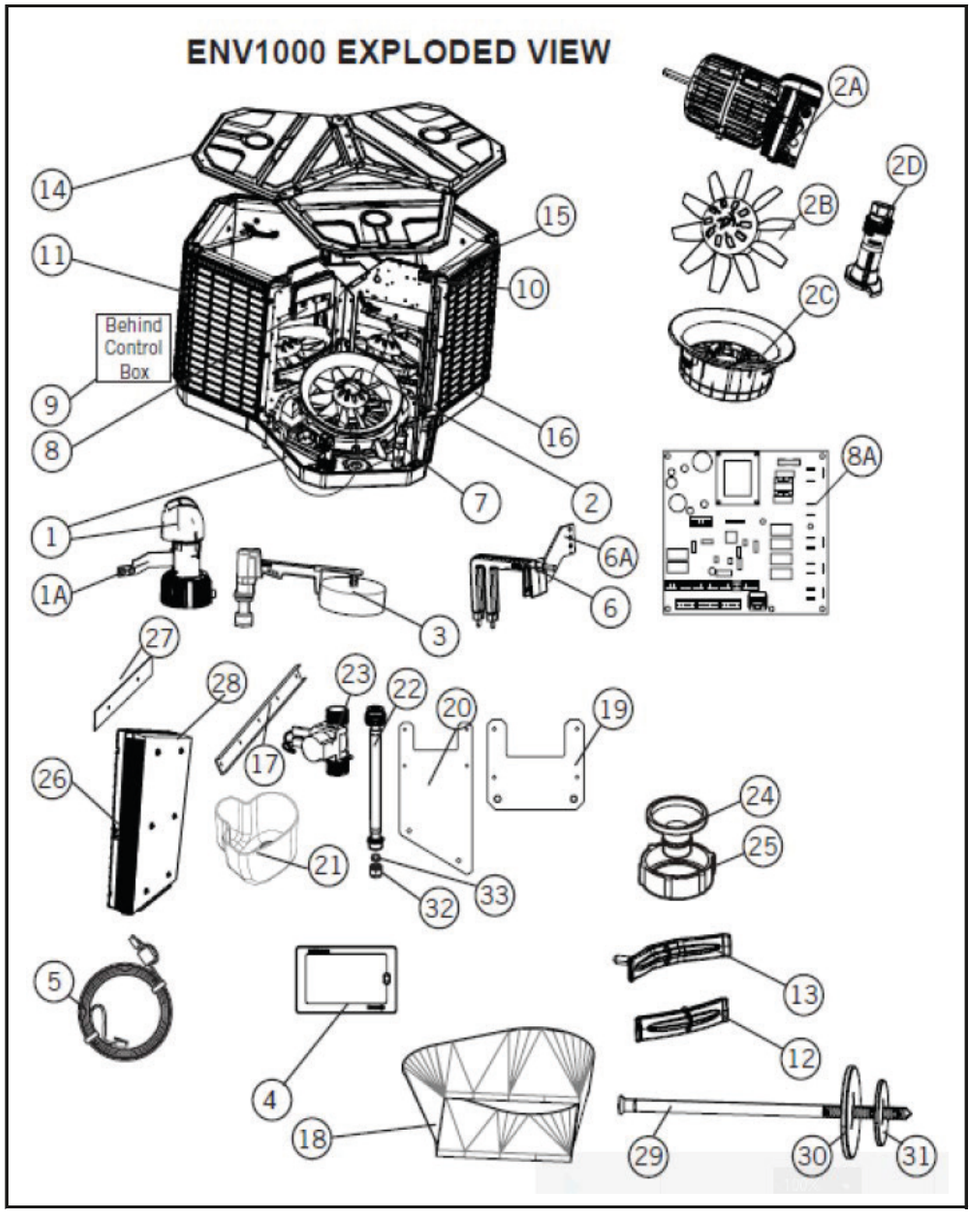

ENV 1000 PARTS LIST CONT.		
DIA#	MFG#	DESCRIPTION
26	116624	PAD FRAME ASSY
27	649344	PAD BLOCKER
28	119994	CHILLCEL PAD
29	561067	PAD RETAINING PIN
30	824659	PAD RETAINING WASHER LARGE
31	401966	PAD RETAINING WASHER
32 / 33	824949	1/2" BSP NUT & OLIVE WATER INLET
N/S	500363	BRACKET MOUNT WALL MAGIQTOUCH
N/S	864402	CABLE ASSY 131' 6 PIN
N/S	116808	KIT BMS INDUSTRIAL MS1
N/S	114750	KIT BMS MASTER INDUSTRIAL M1
N/S	661421	BRASS CONNECTOR 1/2" BSP - 1/4" BSP
N/S	825380	WASHER TAP 18.5*3 BLACK

MOBILEMAX 2 & 3 2-SPEED

LIMITED AVAILABILITY

Breezair Model	MFG#	Industry Standard CFM	Volts	AMPS	Motor HP	Weight LB
MMAX2	056531	6500	115	8.4/5.6	3/4 HP	188
MMAX3	063539	8500	115	11/7.1	1.0 HP	210

MOBILE MAX 2/3 MODEL COOLERS COME EQUIPED WITH THE FOLLOWING

- 2-SPEED JUNCTION BOX
- ELECTRIC MOTOR 2-SPEED
- FAN ASSEMBLY
- TORNADO PUMP 115V UL
- FLOAT VALVE
- THREE (3) ASPEN PADS
- 26 GALLON WATER TANK
- 2-SPEED CONTROL SWITCH
- WATER FITTINGS FOR HOSE HOOK-UP
- 20' POWER CORD

THE MOST COMMON REPLACEMENT PARTS

	111575	2-SPEED JUNCTION BOX MOBILE MAX 2 & 3
	095455	MOTOR 2-SPEED 3/4HP MOBILE MAX 2
	095448	MOTOR 2-SPEED 1HP MOBILE MAX 3
	095851	TORNADO PUMP 115V
	905129	HORIZONTAL FLOAT VALVE
	100203	ASPEN PAD 23 1/2 X 31 MOBILE MAX 2
	100258	ASPEN PAD 32 X 34 MOBILE MAX 3
	832890	V-BELT A50 / 4L-520 MOBILE MAX 2
	826509	V-BELT A55 / 4L-570 MOBILE MAX 3
	109459	BEARING KIT

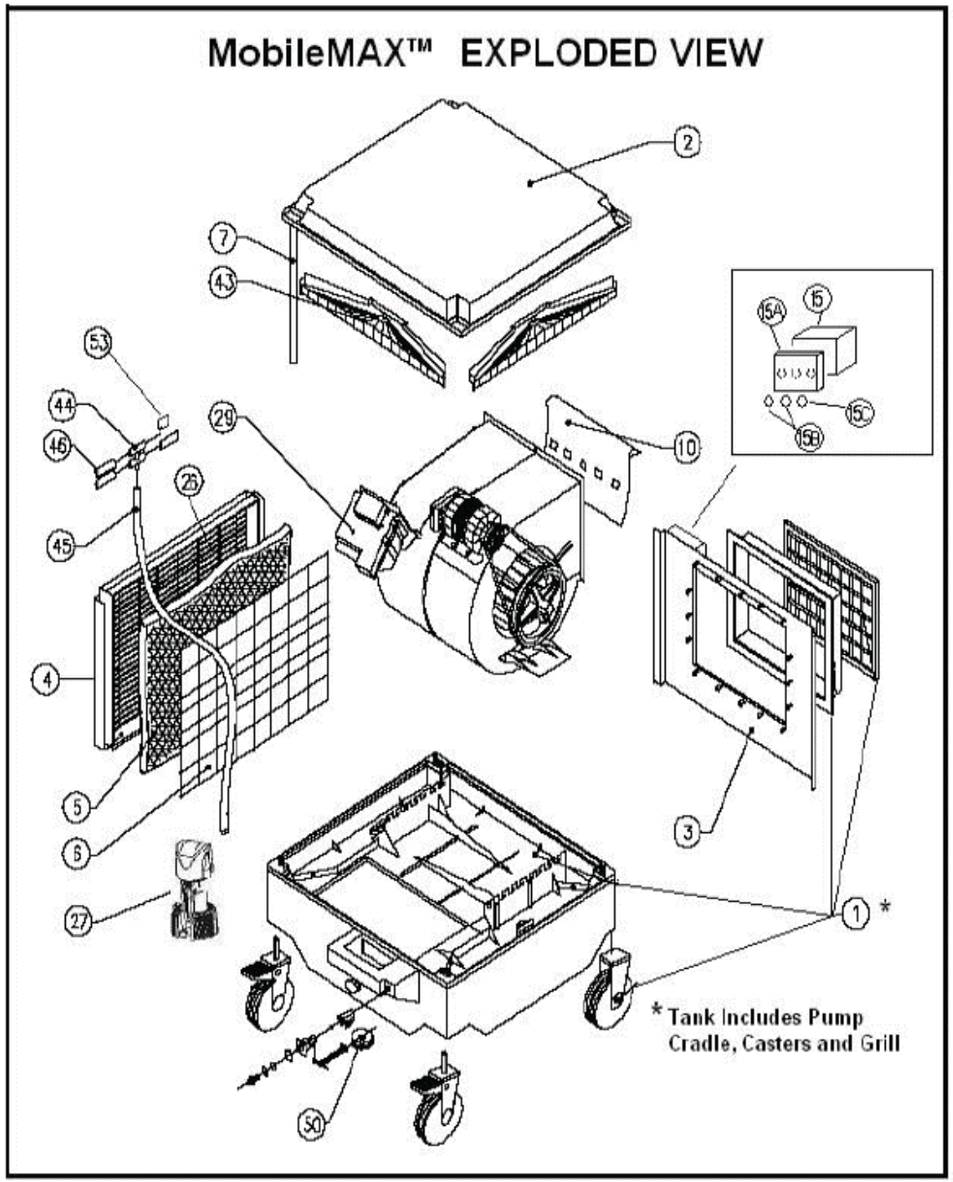

MOBILE MAX 2 & 3 PARTS LIST		
DIA#	**MFG#**	**DESCRIPTION**
1	117706	TANK MMAX2/3 BEIGE (DISCONTINUED)
1	075594	TANK MMAX2/3 GREY
2	505107	LID LARGE MMAX2/3 BEIGE (DISCONTINUED)
2	505138	LID LARGE MMAX 2/3 GREY
3	505503	FRONT PANEL MEDIUM MMAX 2 BEIGE (DISCONTINUED)
3	505534	FRONT PANEL MEDIUM MMAX 2 GREY
3	505909	FRONT PANEL LARGE MMAX 3 BEIGE (DISCONTINUED)
3	505657	FRONT PANEL LARGE MMAX 3 GREY
4	505800	PAD FRAME MEDIUM MMAX 2 BEIGE (DISCONTINUED)
4	505831	PAD FRAME MEDIUM MMAX 2 GREY
4	505909	PAD FRAME LARGE MMAX 3 BEIGE (DISCONTINUED)
4	505930	PAD FRAME LARGE MMAX 3 GREY
5	100203	ASPEN PAD MEDIUM (23.5 X 31) MMAX 2
5	100258	ASPEN PAD LARGE (32 X 34) MMAX 3
6	100050	PAD WIRE MMAX 2
6	100104	PAD WIRE MMAX 3
7	507002	CORNER POST MMAX 2
7	507101	CORNER POST MMAX 3
10	504506	PLATE CUT OFF MMAX 2
10	513805	PLATE CUT OFF MMAX 3
15	834344	SWITCH ENCLOSURE
15A	830124	SWITCH PLATE
15B	830414	TOGGLE SWITCH 30M20
26	543055	LARGE MODS MMAX 2 & 3
27	095851	TORNADO WATER PUMP115V
29	111575	JUNCTION BOX 2 SPPED
43	506777	WATER SPREADER MEDIUM/LARGE
N/S	819204	END CUP 7/8" SQUARE
N/S	095455	MOTOR 3/4 HP 2 SPPED MMAX 2
N/S	095448	MOTOR 1 HP 2 SPPED MMAX 3
N/S	905129	HORIZONTAL FLOAT VALVE
N/S	832890	V BELT A50 / 4L-520 MMAX 2

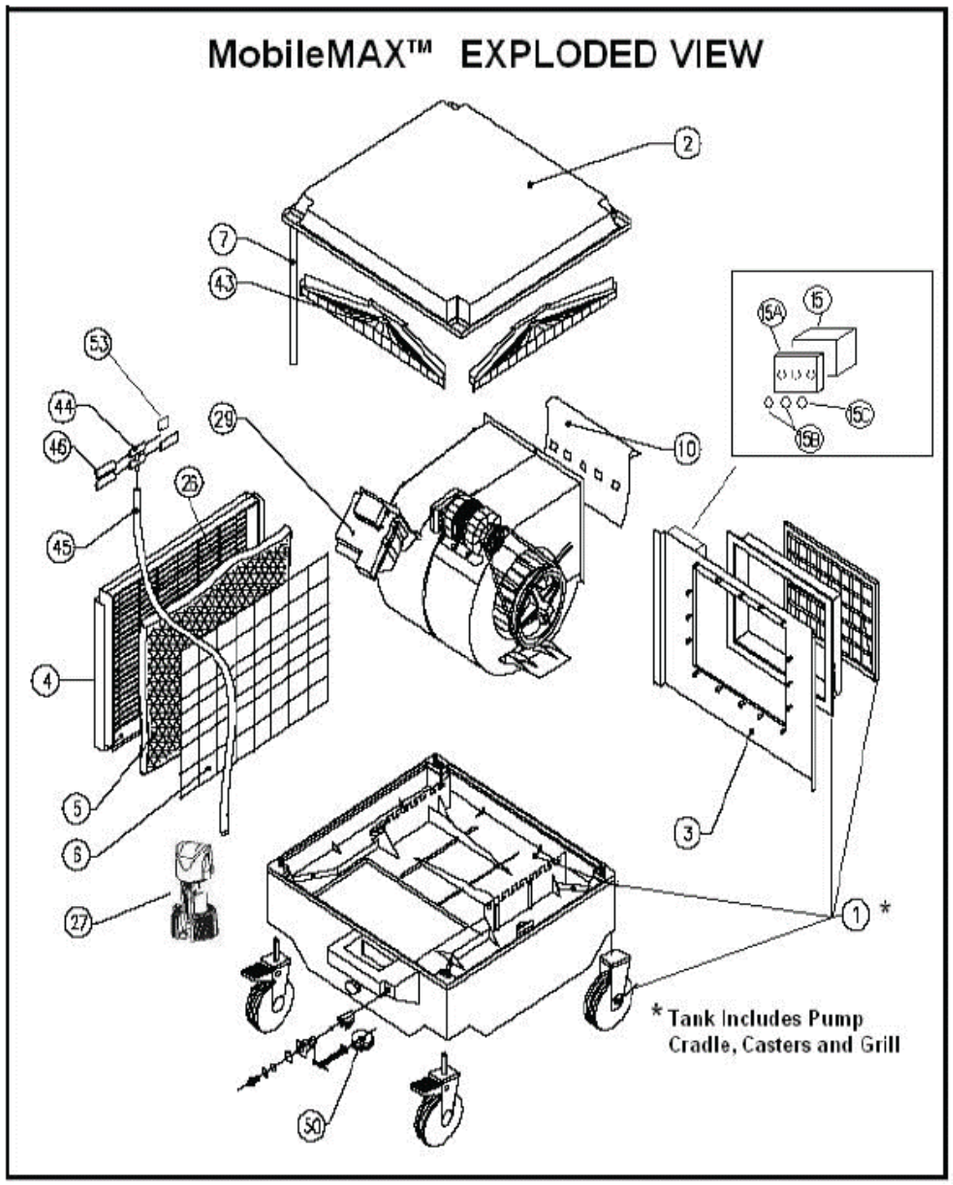

MOBILE MAX 2 & 3 PARTS LIST CONT.		
DIA#	MFG#	DESCRIPTION
N/S	826509	V BELT A55 / 4L-570 MMAX 3
N/S	109459	BEARING KIT
N/S	506203	SCROLL L/H MMAX 2 (MOTOR SIDE)
N/S	506401	SCROLL L/H MMAX 3 (MOTOR SIDE)
N/S	506302	SCROLL RH MEDIUM MMAX 2
N/S	506401	SCROLL RH LARGE MMAX 3
N/S	508108	BRIDGE LARGE MMAX 3
N/S	507866	MOTOR PLATE
N/S	113289	FAN CENTRIFUGAL & SHAFT MMAX 2
N/S	113272	FAN CENTRIFUGAL & SHAFT MMAX 3
N/S	504605	FAN SHAFT LARGE
N/S	501710	FAN PULLEY 8" MMAX 2
N/S	501703	FAN PULLEY 9" MMAX 3
N/S	108070	MOTOR PULLEY 3.5" MMAX 3
N/S	108063	MOTOR PULLEY 4" MMAX 2
N/S	800004	CANOE CLIP BLACK
N/S	804966	CANOE CLIP WHITE
N/S	819204	END CUP 7/8" SQUARE

CLIMATE WIZARD CW3 VAR-SPEED

Convair Model	MFG#	Industry Standard CFM	Volts	AMPS	Motor HP	Weight LB
CW3	072647	2680	200-240	7	1.0HP	440

CW3 MODEL COOLER COME EQUIPPED WITH THE FOLLOWING

- DIGITAL SMARTBOX CONTROL MODULE
- INVERTER DRIVE MOTOR / FAN ASSEMBLIES
- TORNADO WATER PUMP
- 8 MICROCORE INDIRECT / DIRECT PAD ASSEMBLIES
- AUTO WEATHERSEAL DUCT CLOSURE SYSTEM
- 65' COMMUNICATION LEAD, WATER MANAGER, AUTO DRAIN AND PLUMBING FITTINGS.

PLEASE NOTE: CW3 REQUIRES PURCHASE OF ONE OF THE FOLLOWING SPEED CONTROL

	094298	MAGIQTOUCH WIRED SPEED CONTROL KIT INCLUDES WIRED WALL CONTROL HANDSET
	118574	MAGIQTOUCH WIRELESS SPEED CONTROL KIT INCLUDES RF WIRELESS WALL CONTROL HANDSET AND RECEIVER

OPTIONS

	116808	KIT BMS INDUSTRIAL MS1
	114750	KIT BMS MASTER INDUSTRIAL M1
	094274	MAGIQTOUCH MULTI COOLER LINK MODULE
	094328	MAGIQTOUCH AIR SENSOR INTERNAL
	117324	MAGIQTOUCH AIR SENSOR EXTERNAL

THE MOST COMMON REPLACEMENT PARTS

	117928 RP	PCBA ASSY CW3
	122175 RP	MOTOR ASSY 1HP (750W) INVERTER DRIVE (SUPPLY)
	122182 RP	MOTOR ASSY 1 1/3 HP (950W) INVERTER DRIVE (EXHAUST)
	118314 RP	TORNADO PUMP 230V / 60HZ
	122311 RP	AUTO DRAIN 12V
	123097	KIT COMMERCIAL SOLENOID CW3
	833835	WATER PROBE 3 PIN
	866512	CHLORINATOR ASSEMBLY
	122205 RP	MANIFOLD ASSY LEFT CW3 PKD
	122199 RP	MANIFOLD ASSY RIGHT CW3 PKD
	094298 RP	MAGIQTOUCH WIRED WALL CONTROL HANDSET

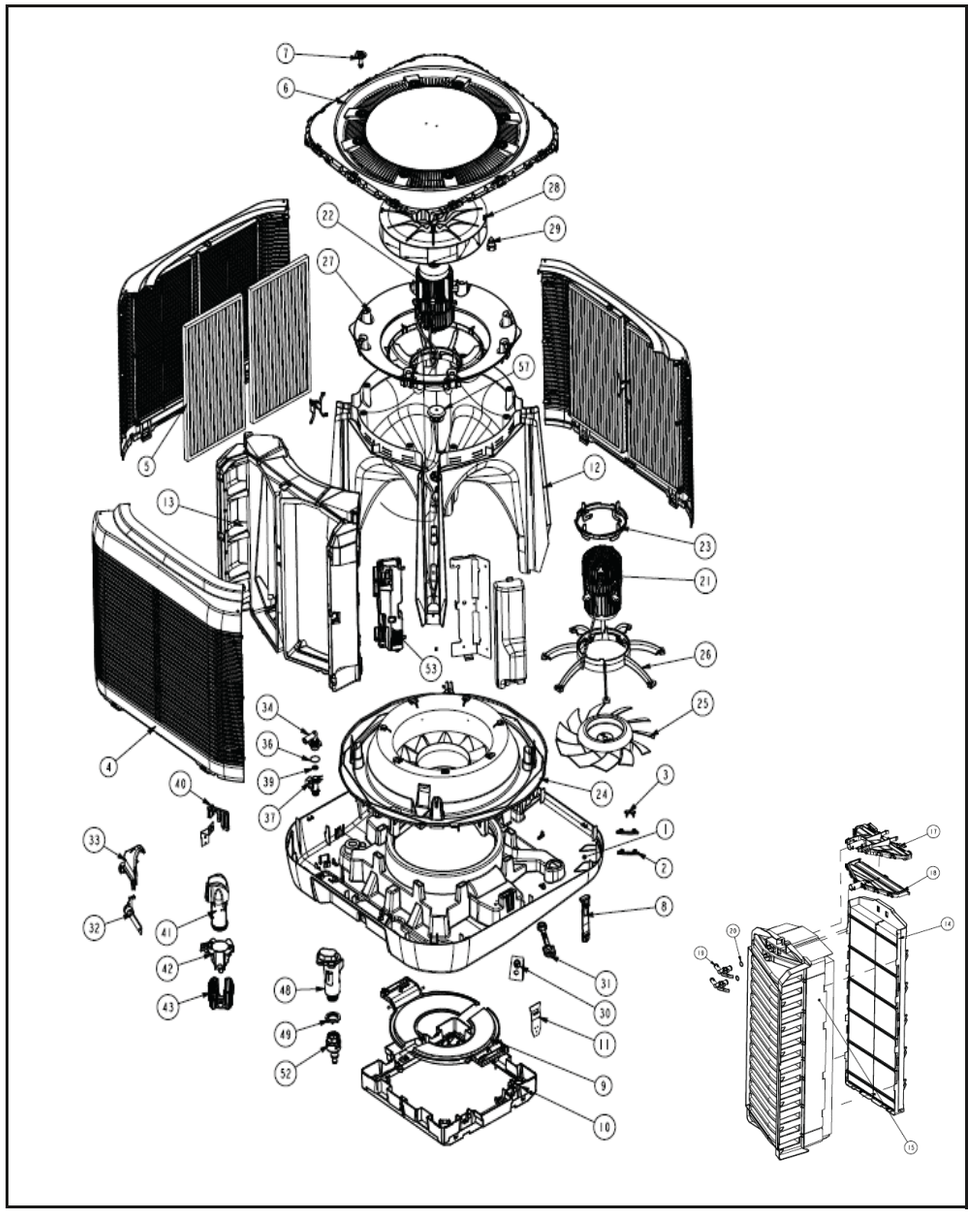

CW3 PARTS LIST		
DIA#	**MFG#**	**DESCRIPTION**
1	562162	TANK MICROCORE GREY
2	562391	CLIP SIDE PANEL CW3
3	562438	CLIP SIDE PANEL TOP CW3
4	562179	PANEL SIDE MICROCORE GREY
5	855879	FILTER CARTRIDGE 25" X 14" X 1"
6	562063	LID GRILLE EXHAUST MICROCORE
7	562223	LID SCREW GRILLE MICROCORE
9	562322RP	SUPPLY DRAUGHT FLAP
10	122328	DROPPER TRANSITION ASSY CW3
11	639381	T-WASHER CW3
12	114905	PLENUM INNER SUB ASSY CW3
13	834660	PLENUM OUTER MICROCORE
15	122199RP	MANIFOLD ASSY RIGHT CW3 PKD
15	122205RP	MANIFOLD ASSY LEFT CW3 PKD
18	122144	SPREADER SUB ASSY INDIRECT
19	562124	SPREADER ELBOW CLIP MICROCORE
20	863208	O'RING BS112
21	122175RP	MOTOR ASSY 1 HP SUPPLY
22	122182RP	MOTOR ASSY 1 1/3 HP EXHAUST
23	562308	RING MOTOR LOCK MICROCORE
24	562046	VENTURI SUPPLY MICROCORE
25	562094	FAN SUPPPLY MICROCORE
26	562186	MOUNT MOTOR SUPPLY MICROCORE
27	562056	VENTURI EXHOUST MICROCORE
28	122342	FAN EXHOUST CW3
29	562476	CAP FAN CW3
30	863832	PLUG VENTURI MICROCORE
31	863665	STRAPS RETENTION MANIFOLD
32	866512	CHLORINATOR ASSEMBLY
33	560294	COVER CHLORINATOR MOUNT
34	935874	FITTING ELBOW AIR-BREAK CW3 & NUT
36	804415L	O'RING BS128 38ID*2.6 N70 M51

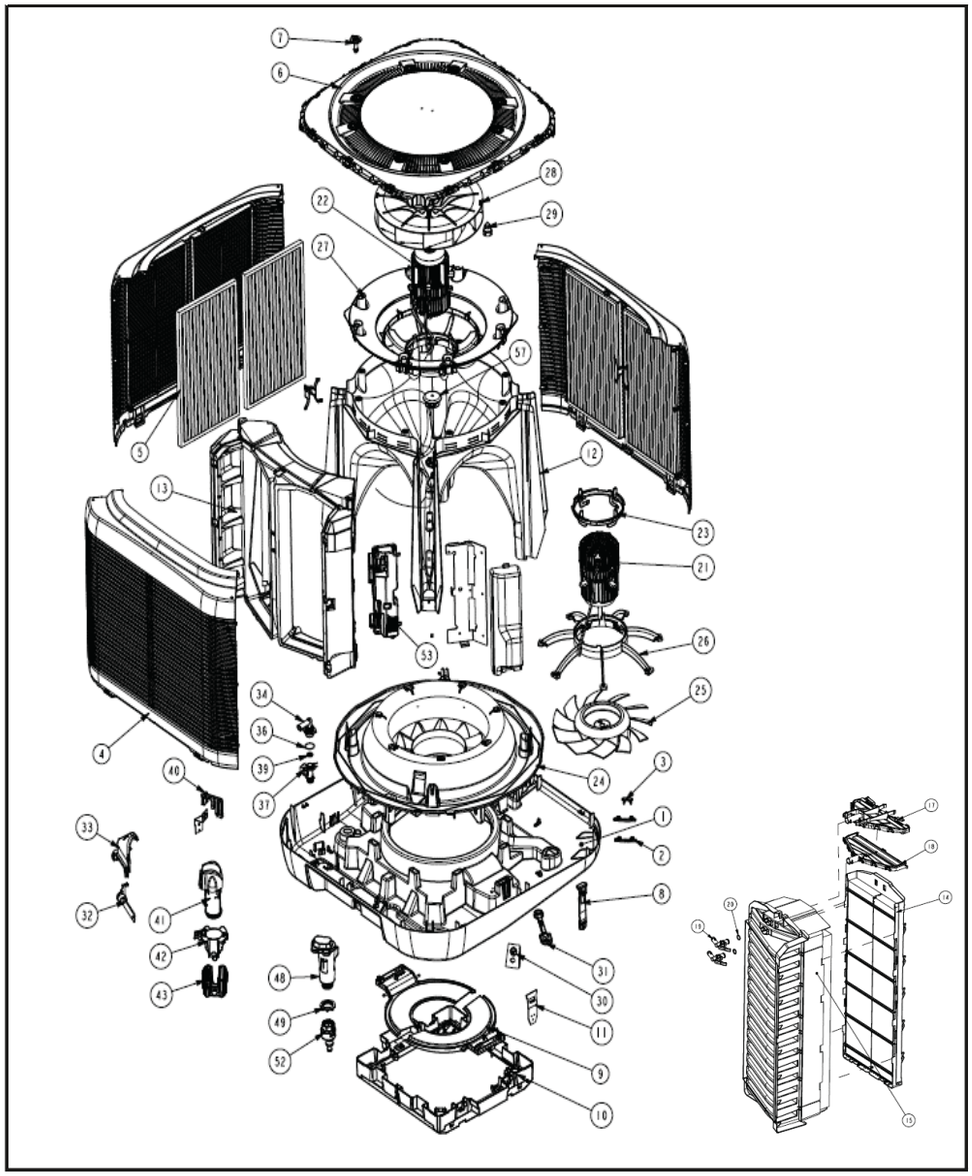

CW3 PARTS LIST CONT.		
DIA#	**MFG#**	**DESCRIPTION**
37	123097	KIT COMMERCIAL SOLENOID CW3
39	815978	WASHER RUBBER LCQ KITS
40	833835	WATER PROBE 3 PIN
41	118314RP	TORNADO PUMP 230V / 60HZ
42	862339	OUTLET TWIN TORNADO PUMP
43	562346	STRAINER TWIN OUTLET TORNADO
48	122311RP	AUTO DRAIN 12V
49	535401	NUT 1.5" BSP
53	117928RP	PCBA ASSY CW3
57	935898	PUCK CAP UMBREL PRESSURE BLOCK
N/S	094298RP	MAGIQTOUCH WIRED WALL CONTROL
N/S	118550RP	MAGIQTOUCH WIRELESS WALL CONTROL
N/S	903316	RECEIVER ASSY RF 915MHZ
N/S	118574	MAGIQTOUCH WIRELESS CONTROL KIT
N/S	833880	CABLE ASSY 65' 6 PIN
N/S	864402	CABLE ASSY 131' 6 PIN
N/S	864396	CABLE ASSY 98' 6 PIN
N/S	862873	CABLE ASSY 5' 6 PIN
N/S	116808	KIT BMS INDUSTRIAL MS1
N/S	114750	KIT BMS MASTER INDUSTRIAL M1
N/S	094274	MAGIQTOUCH LINK MODULE
N/S	094328	MAGIQTOUCH AIR SENSOR INTERNAL
N/S	117324	MAGIQTOUCH AIR SENSOR EXTERNAL
N/S	120904P65	CHILLCEL PAD CW3 8PK
N/S	500363	BRACKET MOUNT WALL MAGIQTOUCH

NOTES